ENGINEERING SKETCH					NAME	ORG CODE	DATE	SKETCH NO.	REV	SHEET 1
NO.	COPIES TO	PROJ		DRAWN	LANEY–A		12 JAN, 04	SK631760.13		OF 4
ORIG		AWD		CHECKED	KINARD–SP		22 JAN, 04	TITLE INSULATION REQUIREMENTS		
				APVD				1 PAC SUPPLY & EXHAUST		

NOTES:

1. SEE INSULATION SPECIFICATION No. 6150–010 FOR MATERIALS AND INSTALLATION REQUIREMENTS.
2. INSULATION BLANKET IS REQUIRED OVER FLANGES AND VALVES, UNLESS OTHERWISE NOTED. SEE INSULATION SPECIFICATION No. 6150–010 FOR MATERIAL REQUIREMENTS.
3. INSULATION BLANKET IS REQUIRED OVER BELLOWS AND PIPE ENDS ON EXPANSION JOINTS. DO NOT INSULATE HINGE PINS. SEE INSULATION SPECIFICATION No. 6150–010 FOR MATERIAL AND INSTALLATION REQUIREMENTS.
4. ALUMINUM METAL JACKET SHALL BE 0.040" THICK ON INSULATION INSIDE THE TEST CELL. PIPING OUTSIDE THE CELL SHALL BE PROTECTED WITH AN ALUMINUM JACKET WITH A NOMINAL THICKNESS OF 0.029". SEE INSULATION SPECIFICATION No. 6150–010 FOR MATERIAL AND INSTALLATION REQUIREMENTS.
5. PIPE SUPPORTS ARE PRE–INSULATED AND DO NOT REQUIRE ADDITIONAL INSULATION.

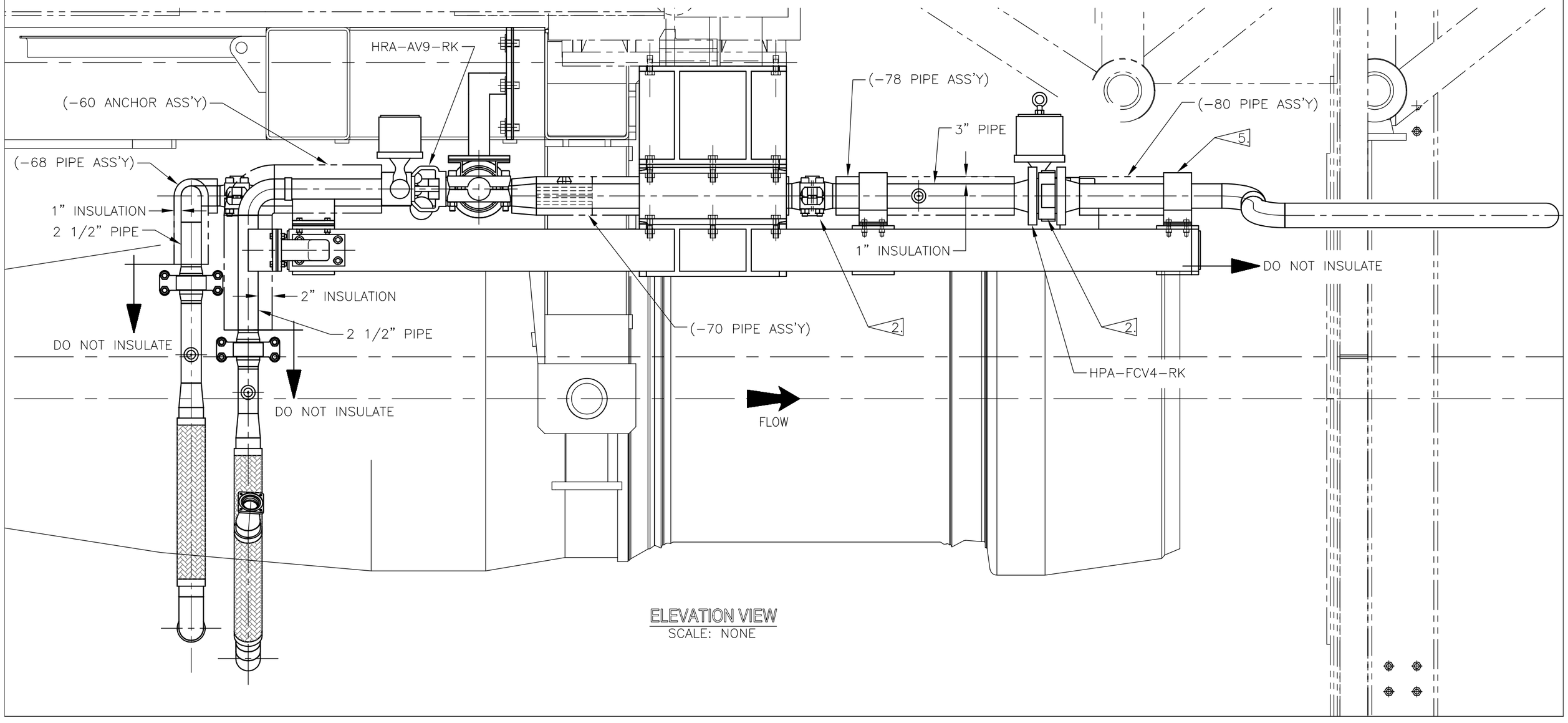

ELEVATION VIEW
SCALE: NONE

ENGINEERING SKETCH					NAME	ORG CODE	DATE	SKETCH NO.	REV	SHEET 2
NO.	COPIES TO	PROJ		DRAWN	LANEY–A		12 JAN, 04	SK631760.13		OF 4
ORIG		AWD		CHECKED	KINARD–SP		22 JAN, 04	TITLE INSULATION REQUIREMENTS		
				APVD				1 PAC SUPPLY & EXHAUST		

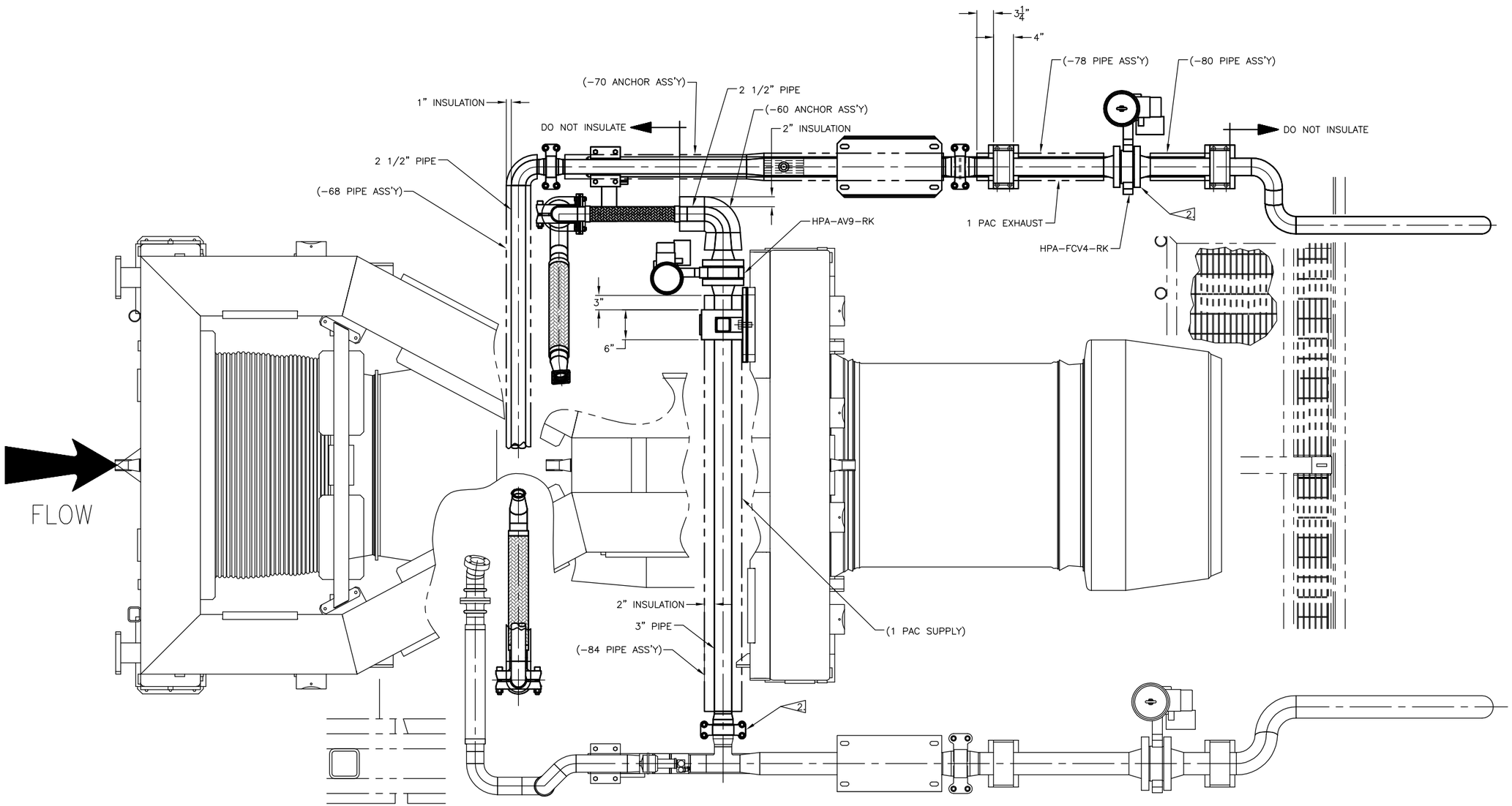

PLAN VIEW
SCALE: NONE

ENGINEERING SKETCH					NAME	ORG CODE	DATE	SKETCH NO.	REV	SHEET 3
NO.	COPIES TO	PROJ		DRAWN	LANEY–A		12 JAN, 04	SK631760.13		OF 4
ORIG		AWD		CHECKED	KINARD–SP		22 JAN, 04	TITLE INSULATION REQUIREMENTS		
				APVD				1 PAC SUPPLY & EXHAUST		

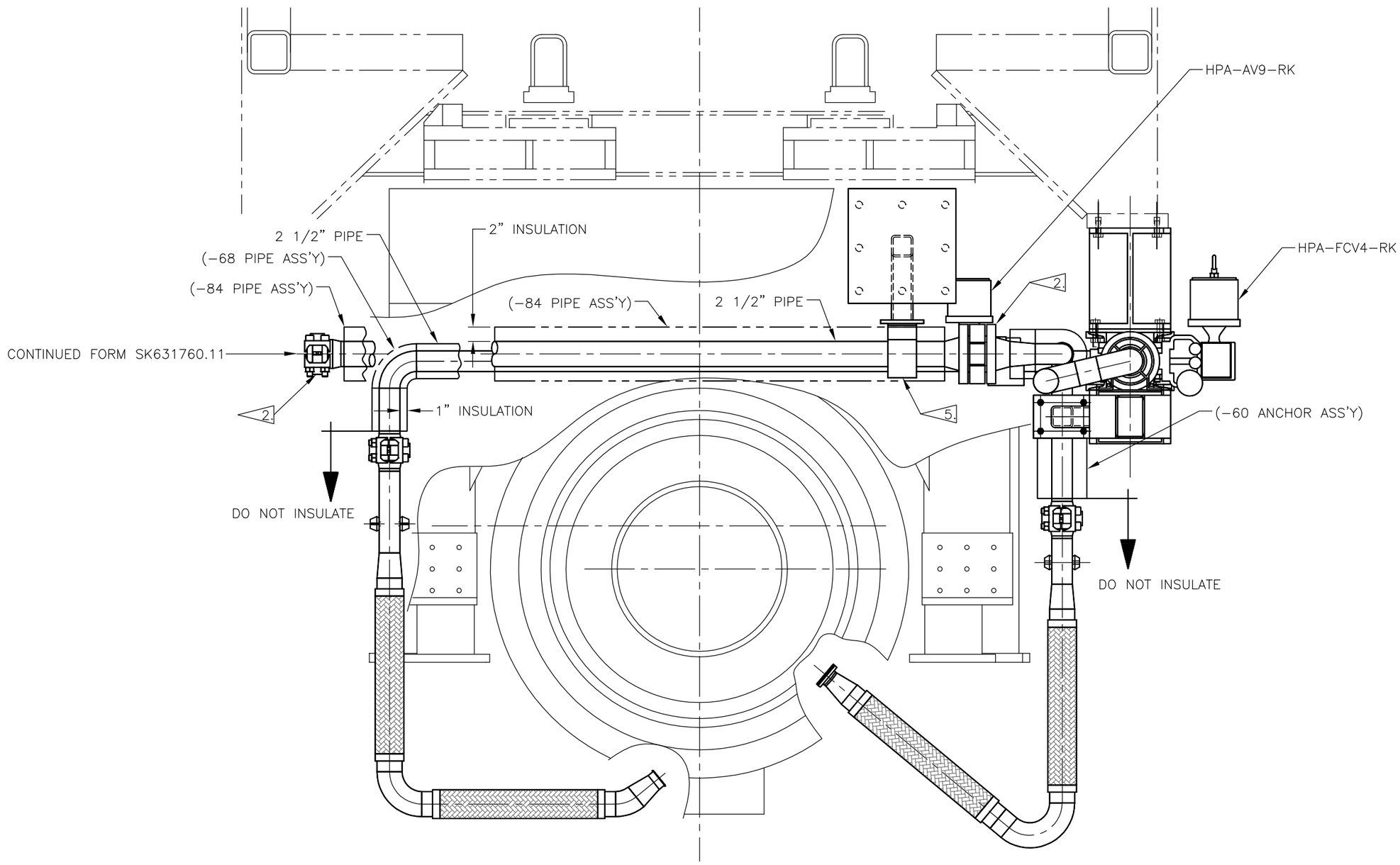

AFT LOOKING FOREWARD
SCALE: NONE

ENGINEERING SKETCH					NAME	ORG CODE	DATE	SKETCH NO.	REV	SHEET 4
NO.	COPIES TO	PROJ		DRAWN	LANEY–A		12 JAN, 04	SK631760.13		OF 4
ORIG		AWD		CHECKED	KINARD–SP		22 JAN, 04	TITLE INSULATION REQUIREMENTS		
				APVD				1 PAC SUPPLY & EXHAUST		

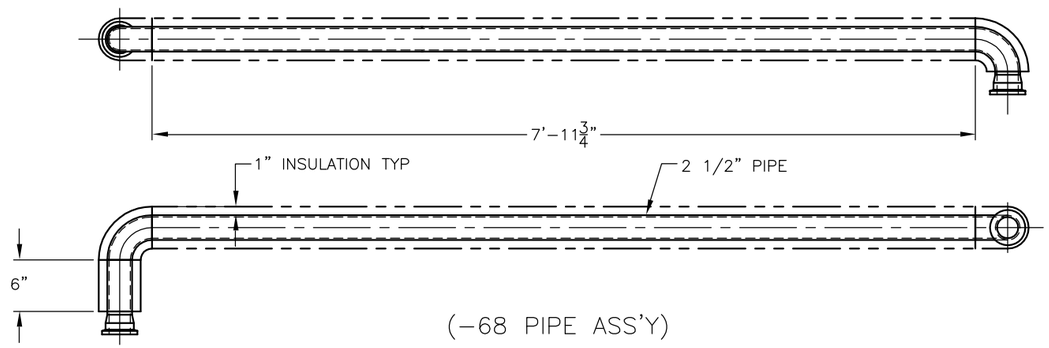

(–68 PIPE ASS'Y)

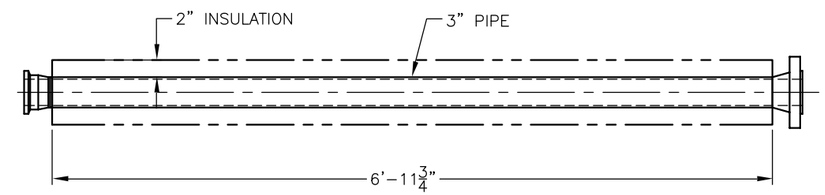

(–84 PIPE ASS'Y)

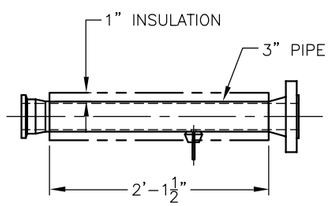

(–78 PIPE ASS'Y)

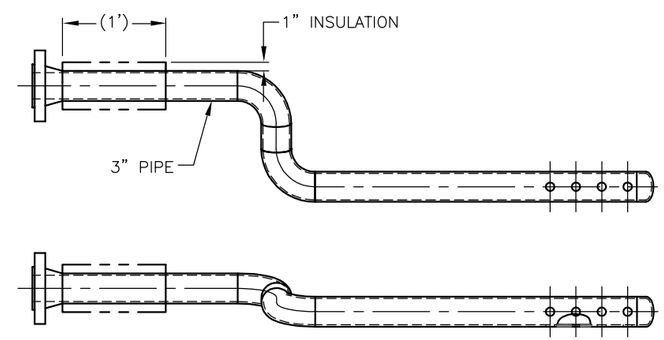

(–80 PIPE ASS'Y)

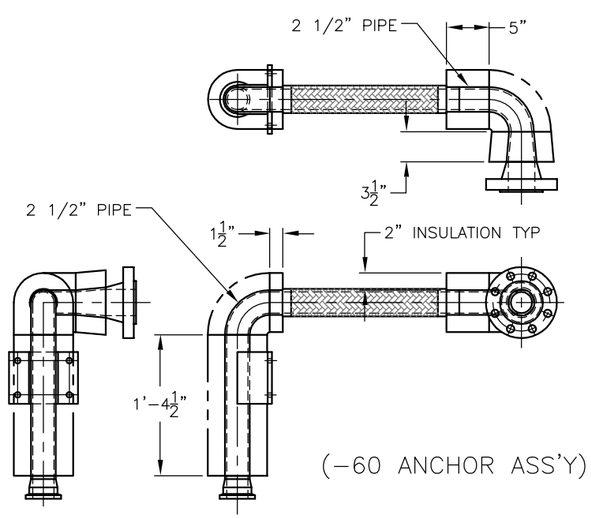

(–60 ANCHOR ASS'Y)

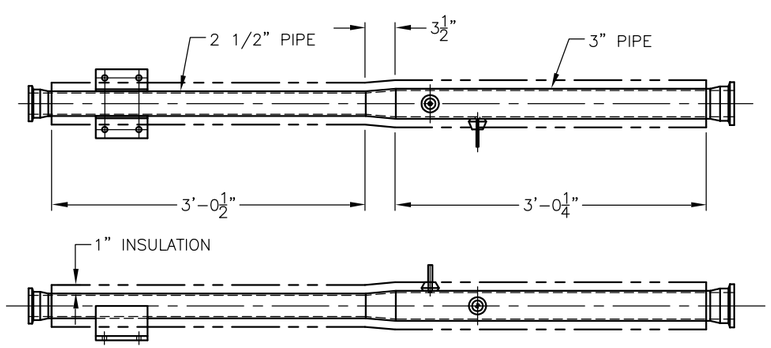

(–70 ANCHOR ASS'Y)