ENGINEERING SKETCH					NAME	ORG CODE	DATE	SKETCH NO.	REV	SHEET 1
NO.	COPIES TO	PROJ		DRAWN	LANEY–A		12 JAN, 04	SK631760.21		OF 10
ORIG		AWD		CHECKED	KINARD–SP		22 JAN, 04	TITLE INSULATION REQUIREMENTS		
				APVD				10" AIR SUPPLY TO T/C		

NOTES:

1. SEE INSULATION SPECIFICATION No. 6150–010 FOR MATERIALS AND INSTALLATION REQUIREMENTS.
2. INSULATION BLANKET IS REQUIRED OVER FLANGES AND VALVES. SEE INSULATION SPECIFICATION No. 6150–010 FOR MATERIAL REQUIREMENTS.
3. INSULATION BLANKET IS REQUIRED OVER BELLOWS AND PIPE ENDS ON EXPANSION JOINTS. DO NOT INSULATE HINGE PINS. SEE INSULATION SPECIFICATION No. 6150–010 FOR MATERIAL AND INSTALLATION REQUIREMENTS.
4. ALUMINUM METAL JACKET SHALL BE 0.040" THICK ON INSULATION INSIDE THE TEST CELL. PIPING OUTSIDE THE CELL SHALL BE PROTECTED WITH AN ALUMINUM JACKET WITH A NOMINAL THICKNESS OF 0.029". SEE INSULATION SPECIFICATION No. 6150–010 FOR MATERIAL AND INSTALLATION REQUIREMENTS.
5. PIPE SUPPORTS ARE PRE–INSULATED AND DO NOT REQUIRE ADDITIONAL INSULATION.
6. DO NOT INSULATE OVER THE ANCHOR BELLOWS, FLANGE, OR BOLTING.

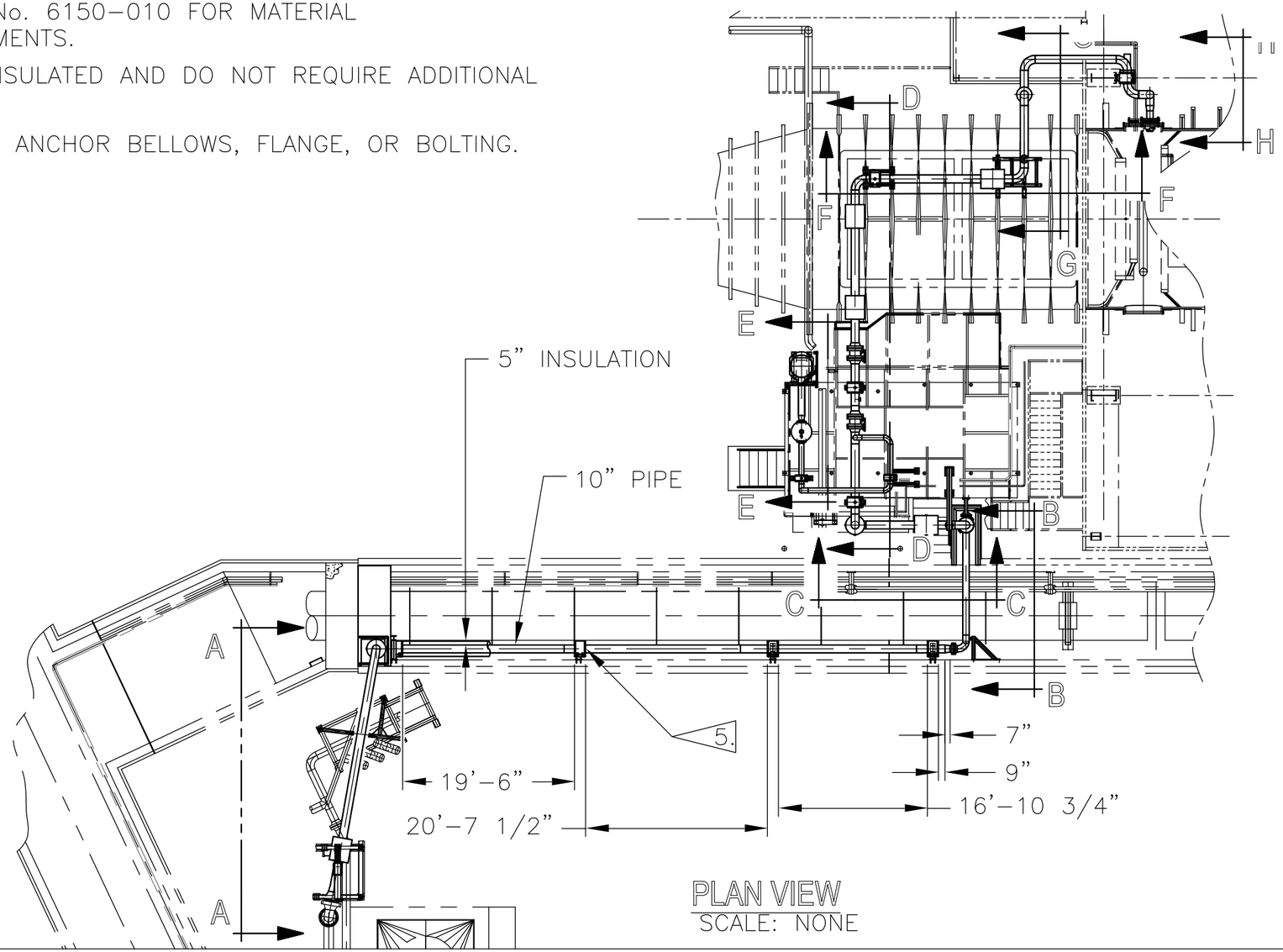

PLAN VIEW
SCALE: NONE

ENGINEERING SKETCH					NAME	ORG CODE	DATE	SKETCH NO.	REV	SHEET 2
NO.	COPIES TO	PROJ		DRAWN	LANEY–A		12 JAN, 04	SK631760.21		OF 10
ORIG		AWD		CHECKED	KINARD–SP		22 JAN, 04	TITLE INSULATION REQUIREMENTS		
				APVD				10" AIR SUPPLY TO T/C		

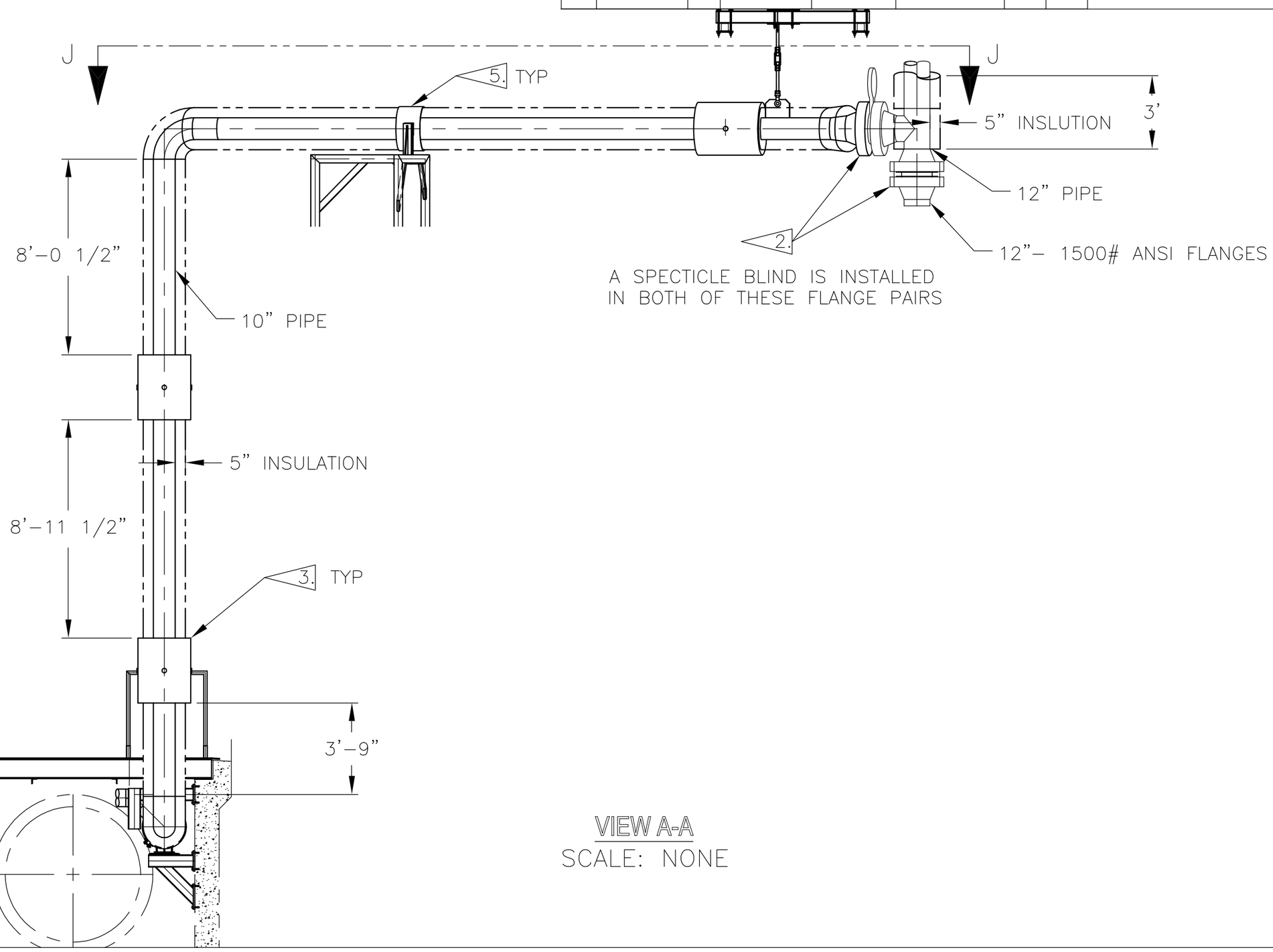

VIEW A-A
SCALE: NONE

ENGINEERING SKETCH					NAME	ORG CODE	DATE	SKETCH NO.	REV	SHEET 3
NO.	COPIES TO	PROJ		DRAWN	LANEY–A		12 JAN, 04	SK631760.21		OF 10
ORIG		AWD		CHECKED	KINARD–SP		22 JAN, 04	TITLE INSULATION REQUIREMENTS		
				APVD				10" AIR SUPPLY TO T/C		

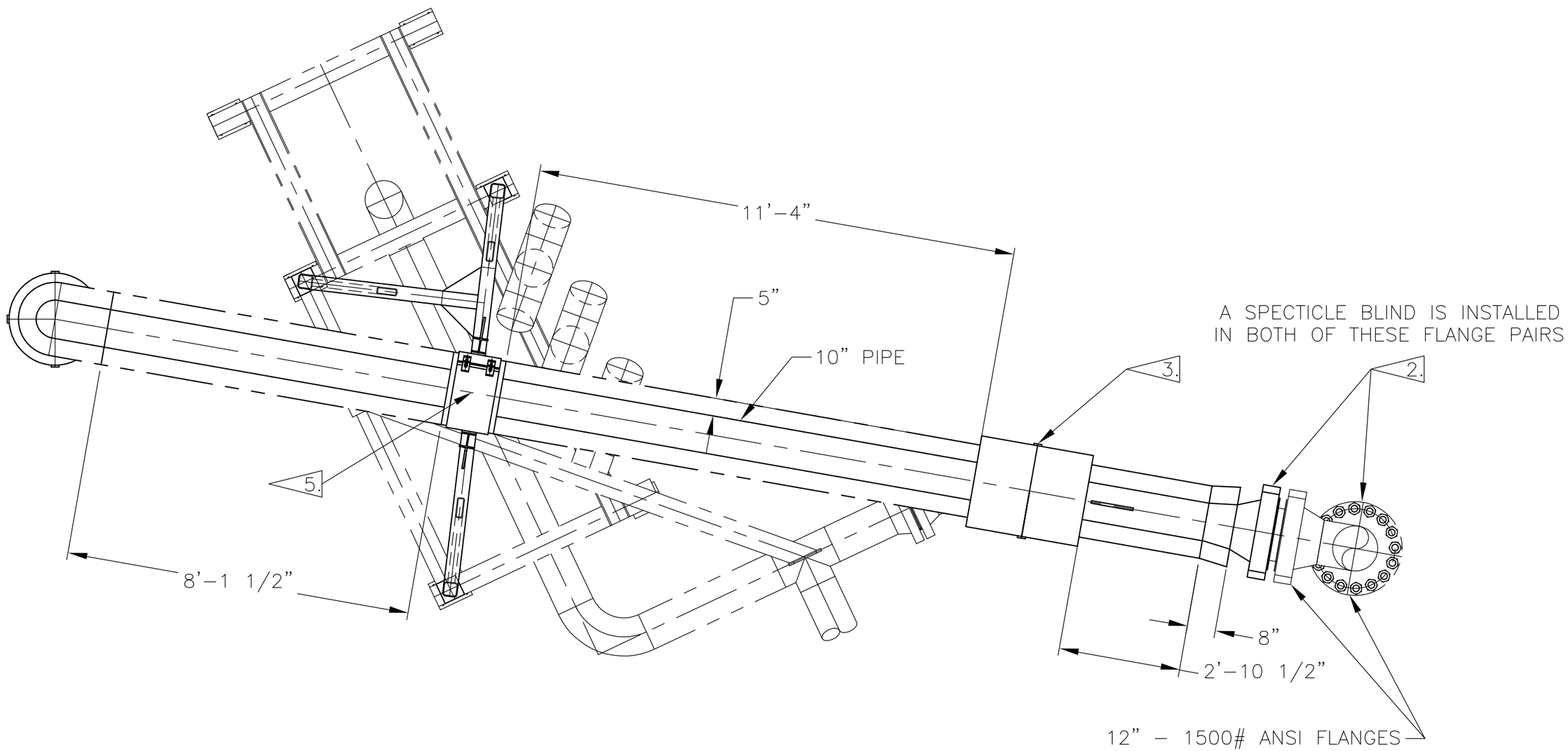

VIEW J-J
SCALE: NONE

ENGINEERING SKETCH					NAME	ORG CODE	DATE	SKETCH NO.	REV	SHEET 4
NO.	COPIES TO	PROJ		DRAWN	LANEY–A		12 JAN, 04	SK631760.21		OF 10
ORIG		AWD		CHECKED	KINARD–SP		22 JAN, 04	TITLE INSULATION REQUIREMENTS		
				APVD				10" AIR SUPPLY TO T/C		

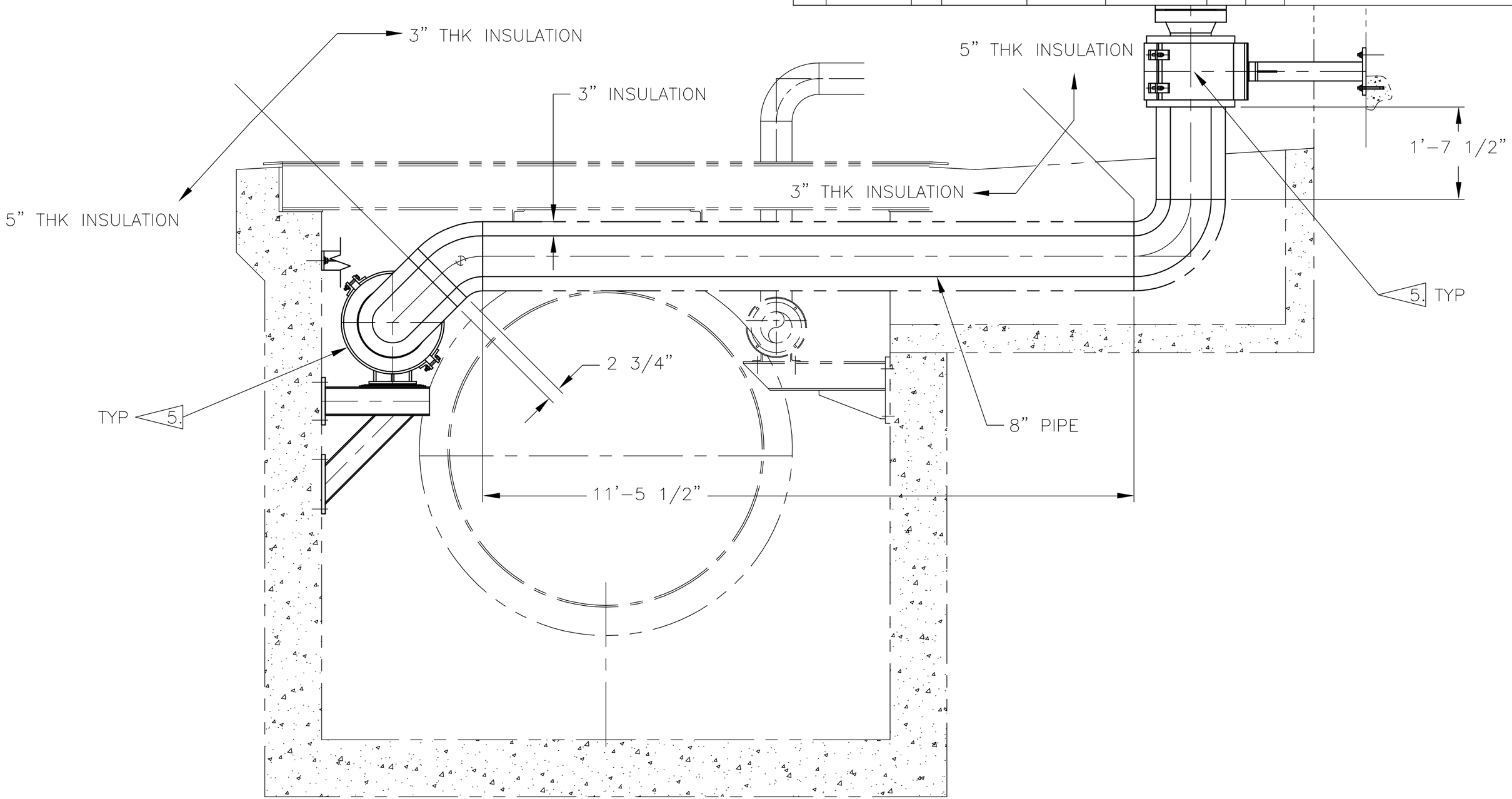

VIEW B-B
SCALE: NONE

ENGINEERING SKETCH					NAME	ORG CODE	DATE	SKETCH NO.	REV	SHEET 5
NO.	COPIES TO	PROJ		DRAWN	LANEY–A		12 JAN, 04	SK631760.21		OF 10
ORIG		AWD		CHECKED	KINARD–SP		22 JAN, 04	TITLE INSULATION REQUIREMENTS		
				APVD				10" AIR SUPPLY TO T/C		

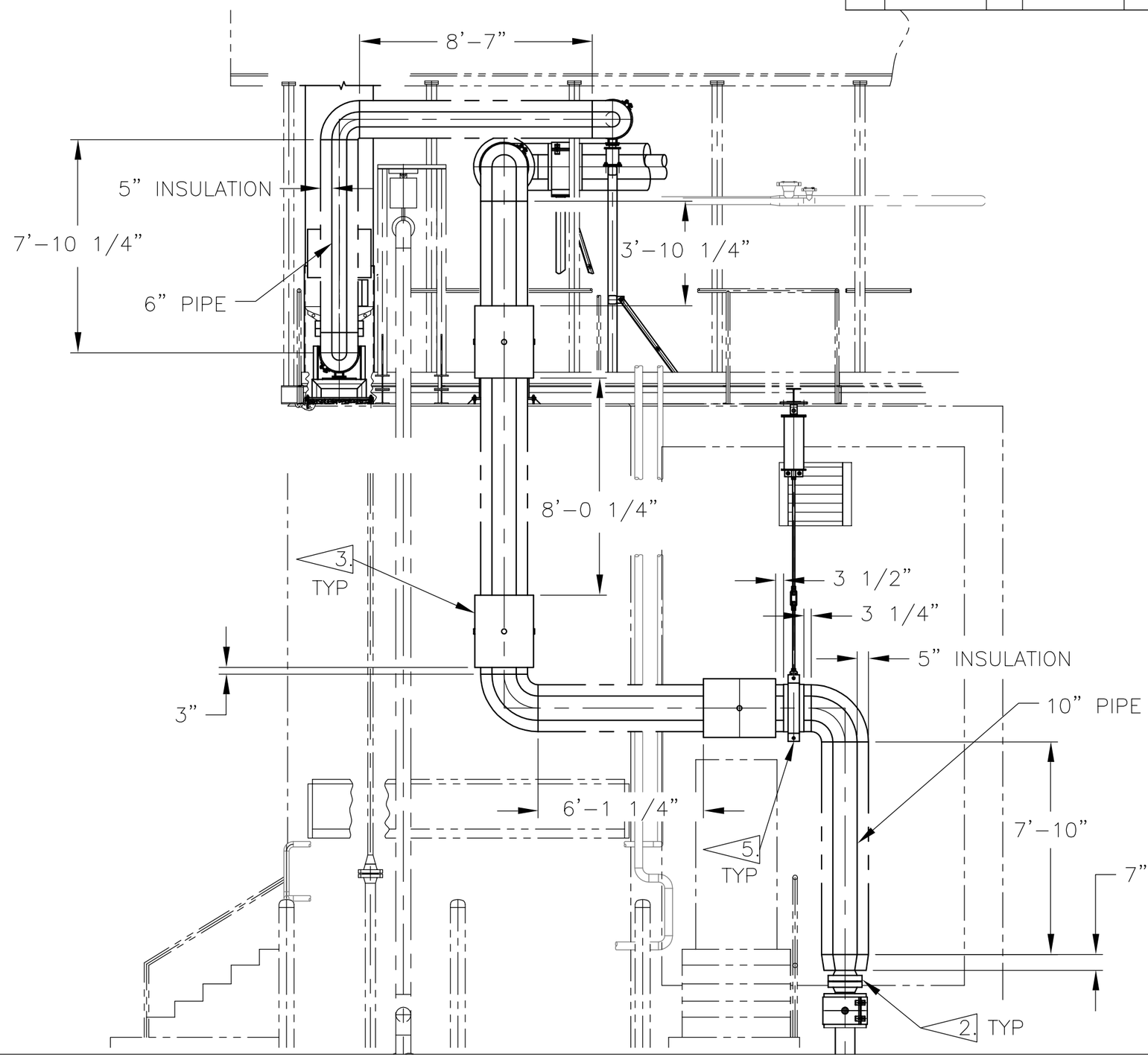

VIEW C-C
SCALE: NONE

ENGINEERING SKETCH					NAME	ORG CODE	DATE	SKETCH NO.	REV	SHEET 6
NO.	COPIES TO	PROJ		DRAWN	LANEY–A		12 JAN, 04	SK631760.21		OF 10
ORIG		AWD		CHECKED	KINARD–SP		22 JAN, 04	TITLE INSULATION REQUIREMENTS		
				APVD				10" AIR SUPPLY TO T/C		

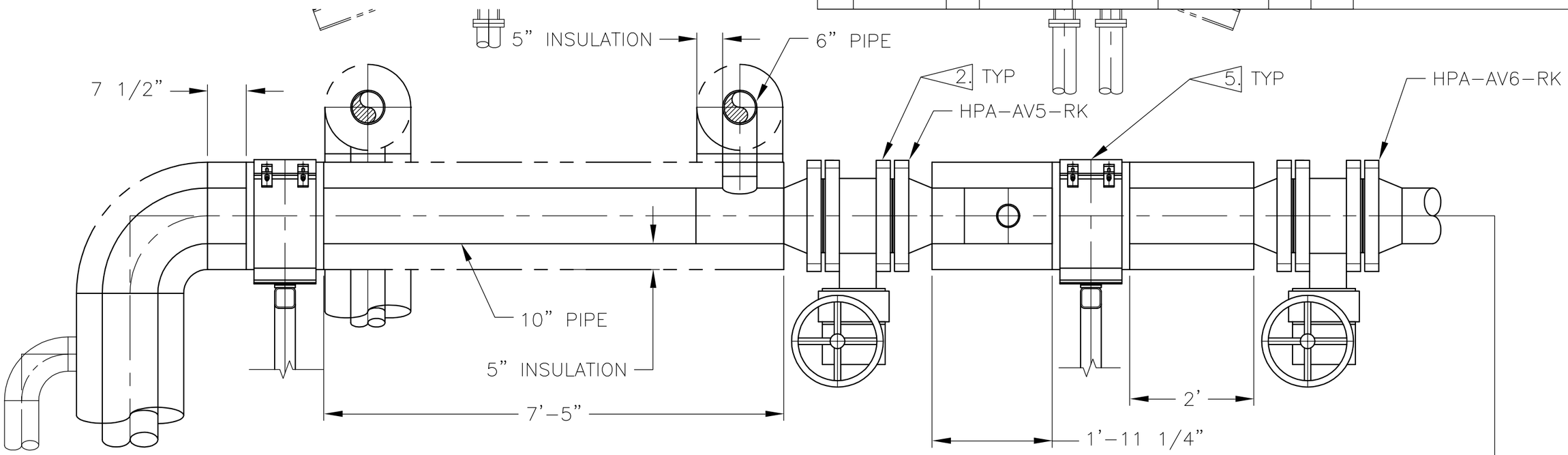

CONTINUE

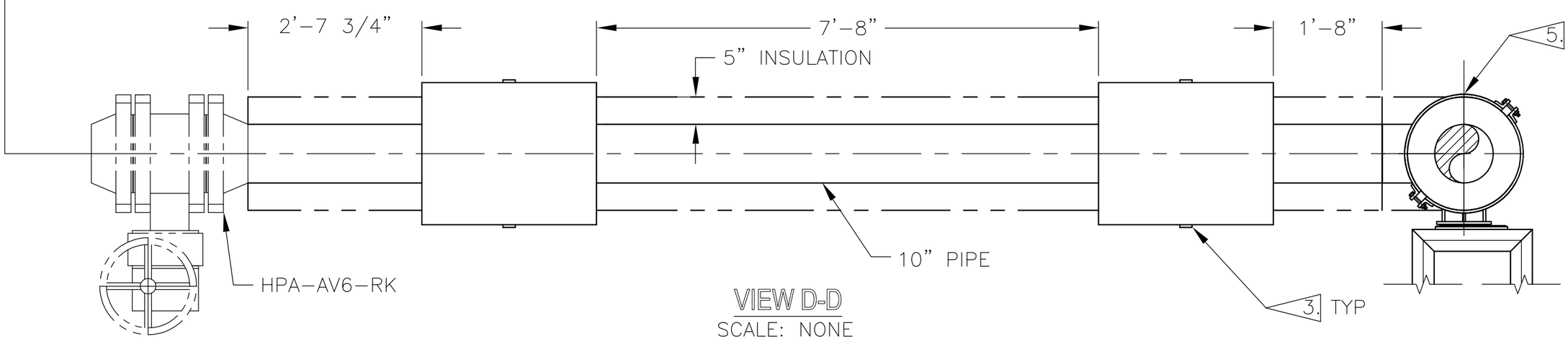

VIEW D-D
SCALE: NONE

ENGINEERING SKETCH					NAME	ORG CODE	DATE	SKETCH NO.	REV	SHEET 7
NO.	COPIES TO	PROJ		DRAWN	LANEY–A		12 JAN, 04	SK631760.21		OF 10
ORIG		AWD		CHECKED	KINARD–SP		22 JAN, 04	TITLE INSULATION REQUIREMENTS		
				APVD				10" AIR SUPPLY TO T/C		

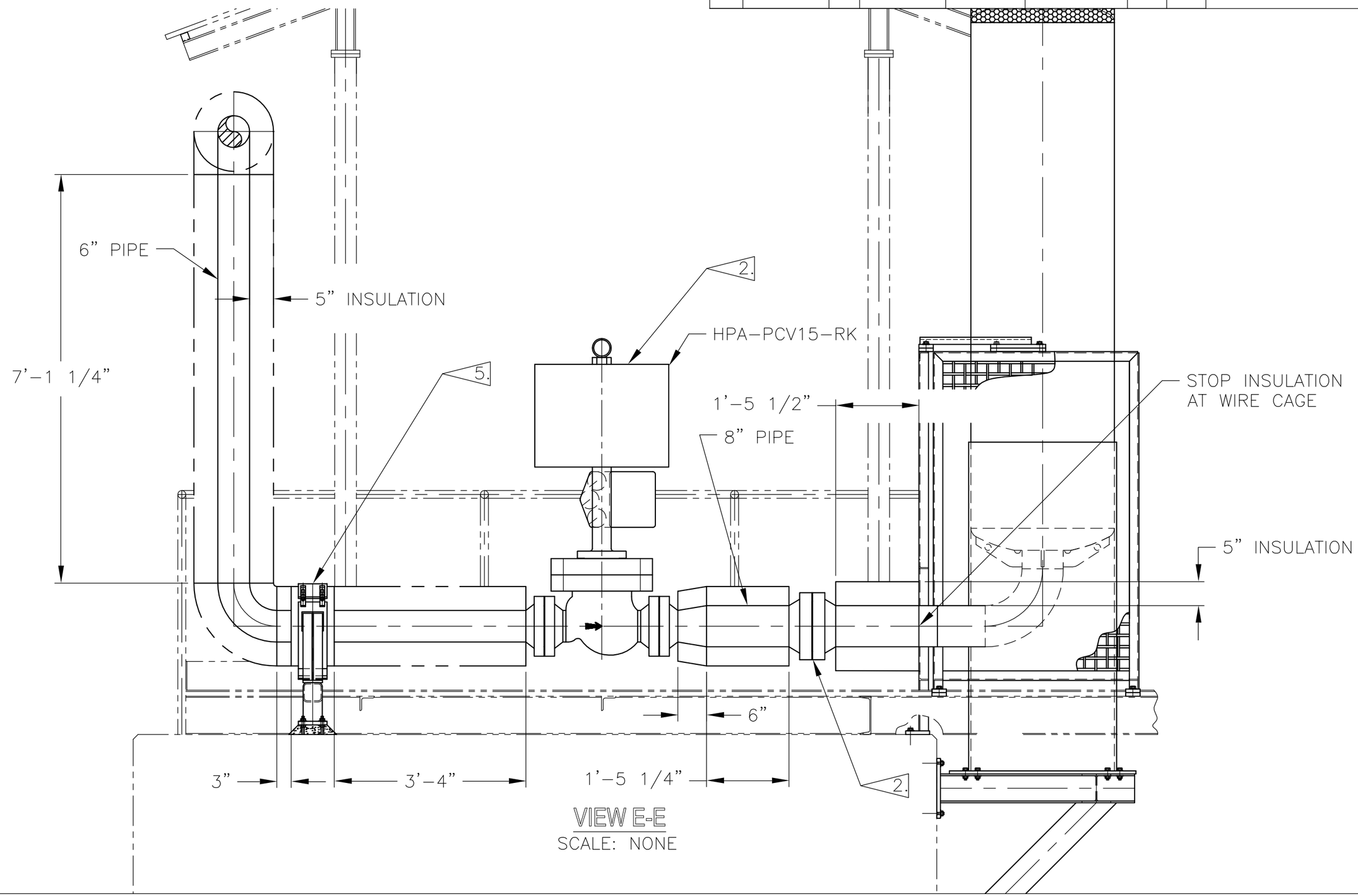

VIEW E-E
SCALE: NONE

ENGINEERING SKETCH					NAME	ORG CODE	DATE	SKETCH NO.	REV	SHEET 8
NO.	COPIES TO	PROJ		DRAWN	LANEY–A		12 JAN, 04	SK631760.21		OF 10
ORIG		AWD		CHECKED	KINARD–SP		22 JAN, 04	TITLE INSULATION REQUIREMENTS		
				APVD				10" AIR SUPPLY TO T/C		

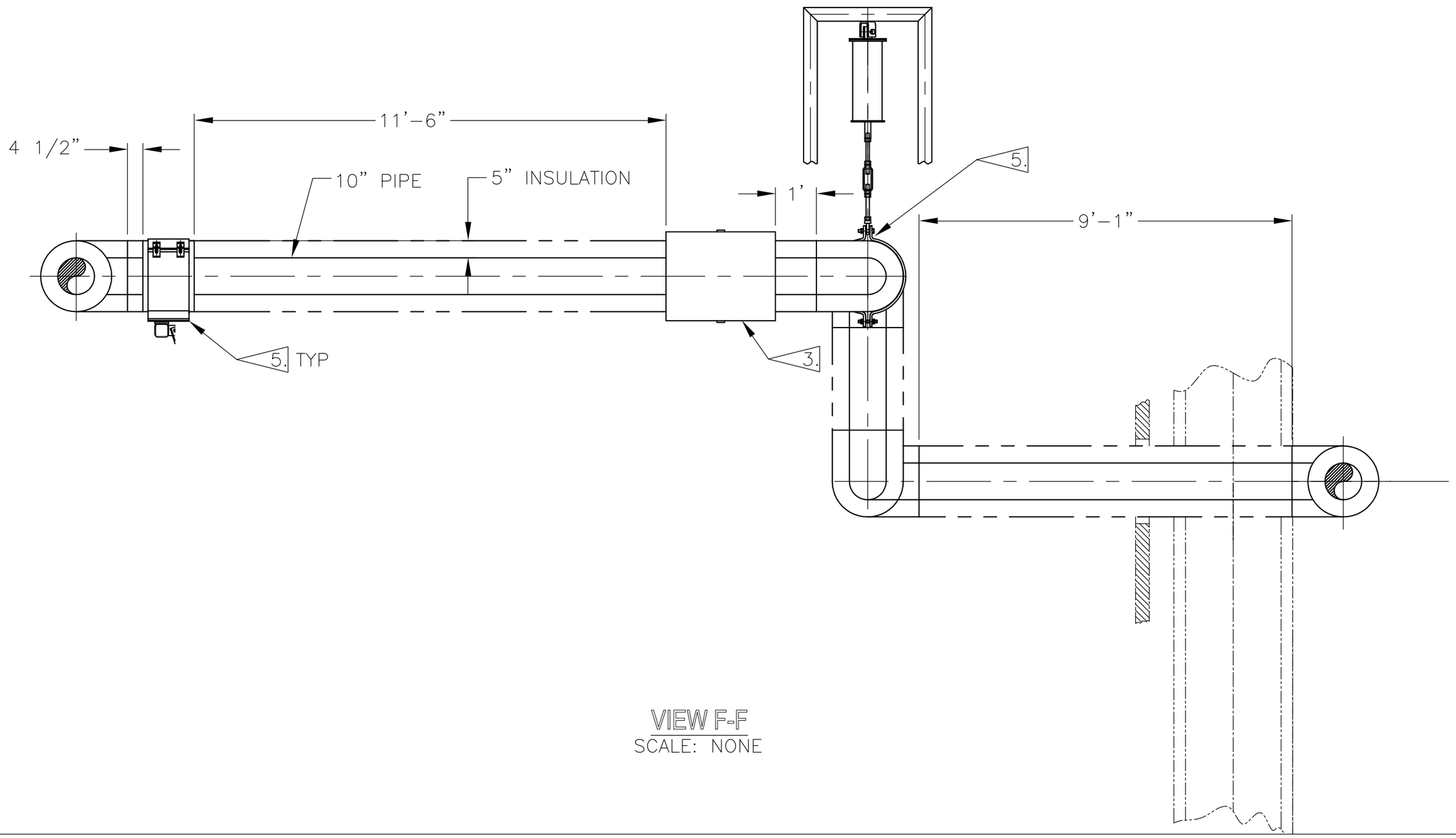

VIEW F-F
SCALE: NONE

ENGINEERING SKETCH					NAME	ORG CODE	DATE	SKETCH NO.	REV	SHEET 9
NO.	COPIES TO	PROJ		DRAWN	LANEY–A		12 JAN, 04	SK631760.21		OF 10
ORIG		AWD		CHECKED	KINARD–SP		22 JAN, 04	TITLE INSULATION REQUIREMENTS		
				APVD				10" AIR SUPPLY TO T/C		

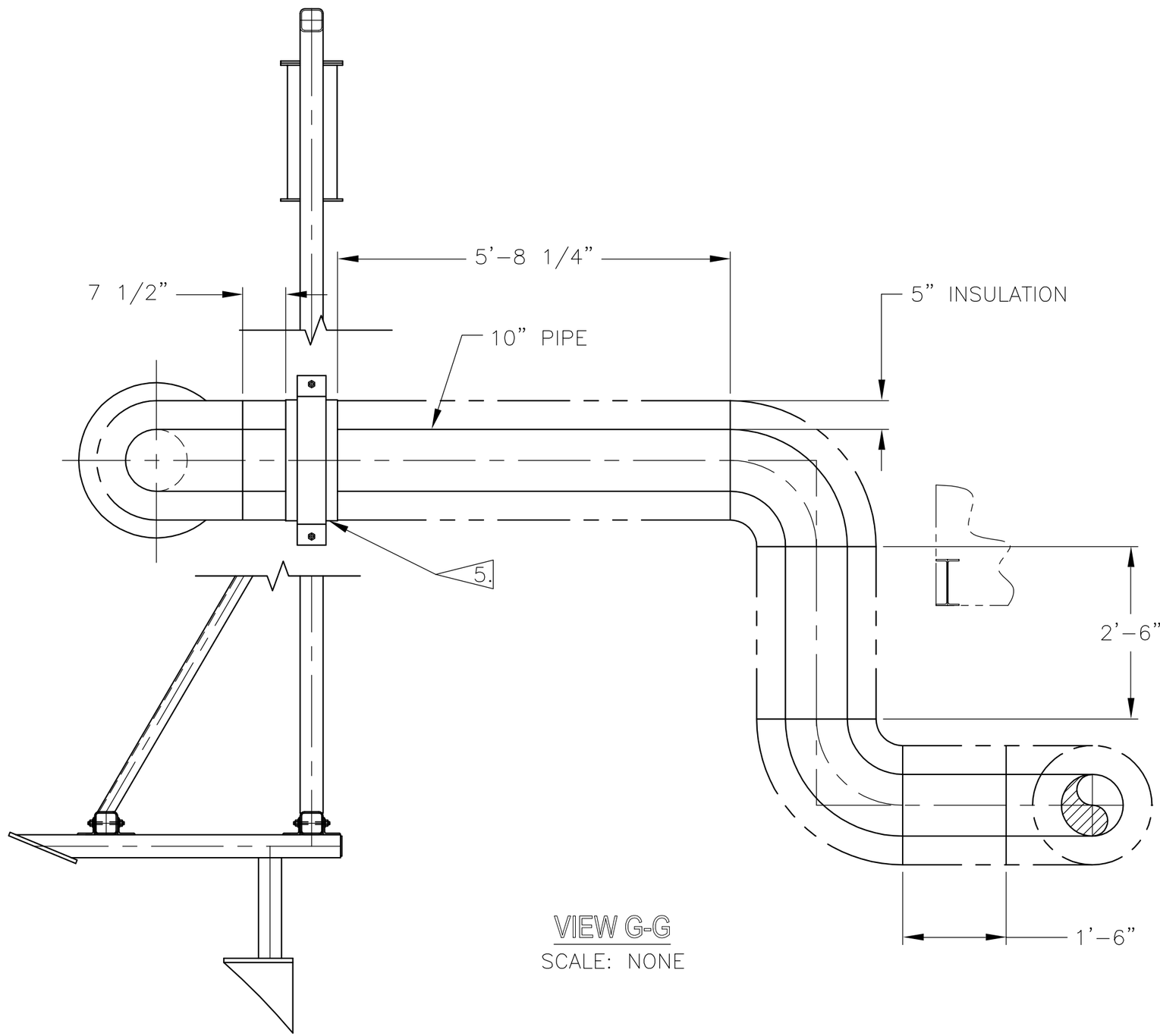

VIEW G-G

SCALE: NONE

ENGINEERING SKETCH					NAME	ORG CODE	DATE	SKETCH NO.	REV	SHEET 10
NO.	COPIES TO	PROJ		DRAWN	LANEY–A		12 JAN, 04	SK631760.21		OF 10
ORIG		AWD		CHECKED	KINARD–SP		22 JAN, 04	TITLE INSULATION REQUIREMENTS		
				APVD				10" AIR SUPPLY TO T/C		

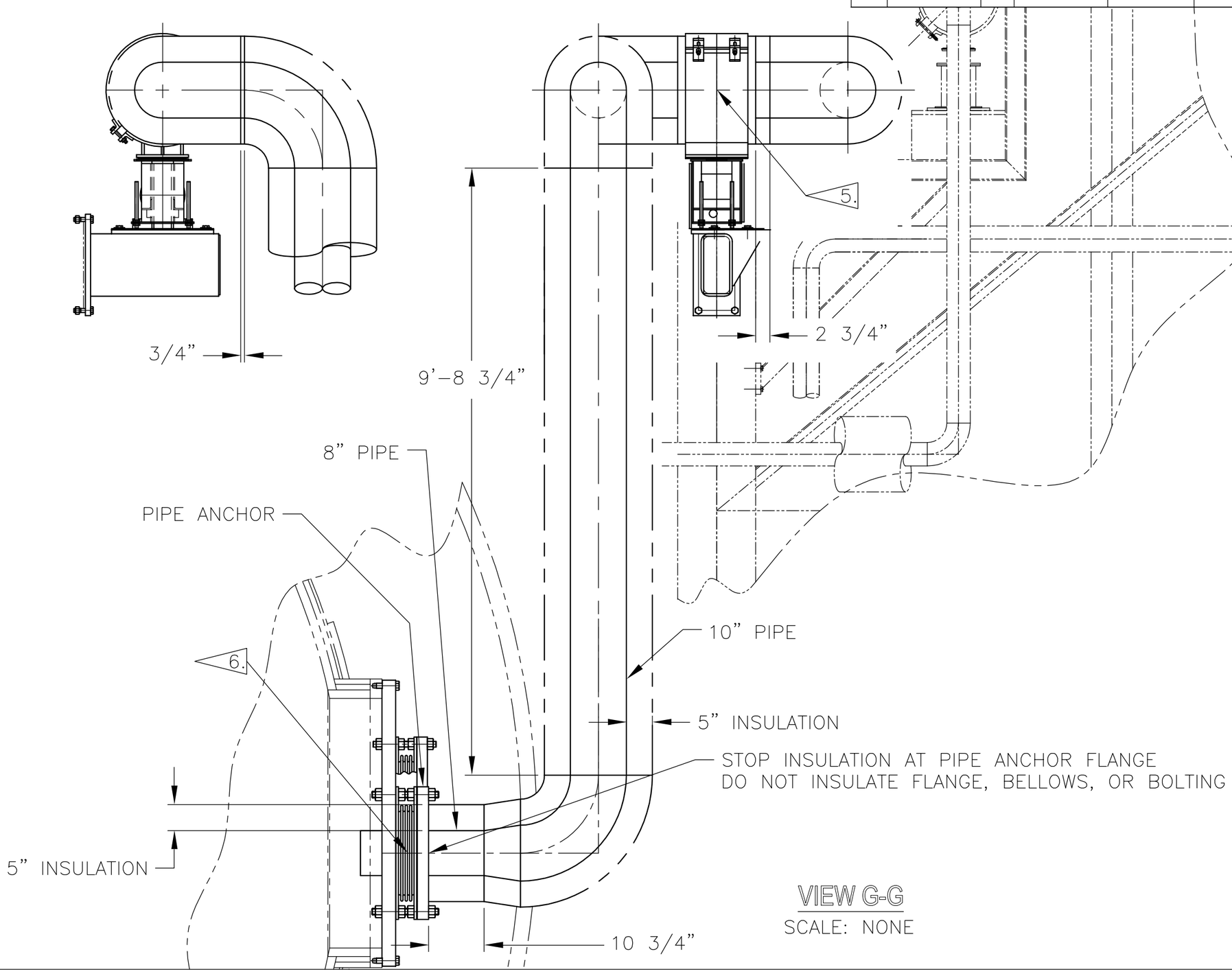

VIEW G-G

SCALE: NONE