3.2.2.1.1 (U) X-MIT AUDIO (HI)

1. SIGNAL TITLE: X-MIT AUDIO - HI (Black Modulation - HI)

2. SIGNAL TYPE: Audio & Balanced

3. SIGNAL FROM: Integrated Communications Control Panel (ICCP) J2-49 (RT #1) ICCP J2-71 (RT #2)

4. FUNCTION: Provide narrow-band modulation control to the ARC-164(V) transmitter

5. NUMBER OF WIRES: 1

6. RT-1145/ARC-164(V) CONNECTOR/PIN ASSIGNMENT: J1-K

7. SIGNAL CHARACTERISTICS:

a. SOURCE IMPEDANCE: 150 Ω Transformer Output

b. LOAD IMPEDANCE: 150 Ω Differential Amplifier

c. LOAD CURRENT: 40 mA

d. INPUT VOLTAGE RANGE: 0-6.0 Vrms

e. MODULATION RANGE: 0-100% AM

f. MODULATION CHARACTERISTICS:

1) $|m| \geq 80\%$ for Vi = 1.4 Vrms @1000 Hz; -m linear function of Vi for all 0 Vrms $\leq$ Vi $\leq$ 1.4 Vrms

2) $80\% \leq |m| \leq 100\%$ for 1.4 Vrms $\leq$ Vi $\leq$ 6.0 Vrms

g. FREQUENCY RANGE: 300-3500 Hz

h. SHIELDING REQUIREMENTS: Twisted, shielded-pair with X-MIT AUDIO (LO)

i. RISE TIME: N/A

j. FALL TIME: N/A

k. SPECIAL REQUIREMENTS: Modulation percentage based upon average rf carrier. With an input of 1.0 Vrms between 300 and 3500 Hz, the demodulated audio carrier voltage shall be +1 dB, -3 dB with respect to that produced by a 1.0 Vrms input voltage @ 1000 Hz.

3.2.2.1.2 (U) X-MIT AUDIO (LO)

1.	SIGNAL TITLE:	X-MIT AUDIO (LO) (Black modulation-return)
2.	SIGNAL TYPE:	Signal Return
3.	SIGNAL FROM:	Integrated Communications Control Panel (ICCP) J2-68 (RT-#1) J2-72 (RT #2)
4.	FUNCTION:	Provide signal return for narrow-band modulation input
5.	NUMBER OF WIRES:	1
6.	RT-1145/ARC-164(V) CONNECTOR/PIN ASSIGNMENT:	J1-L
7.	SIGNAL CHARACTERISTICS:	
a.	SOURCE IMPEDANCE:	N/A
b.	LOAD IMPEDANCE:	N/A
c.	LOAD CURRENT:	N/A
d.	INPUT VOLTAGE RANGE:	N/A
e.	MODULATION RANGE:	N/A
f.	MODULATION CHARACTERISTICS:	N/A
g.	FREQUENCY RANGE:	300-3500 Hz
h.	SHIELDING REQUIREMENTS:	Twisted, shielded pair with X-MIT AUDIO (HI)
i.	RISE TIME:	N/A
j.	FALL TIME:	N/A
k.	SPECIAL REQUIREMENTS:	Returns isolated from ground. Shield tied to chassis ground at R/T.

3.2.2.1.3 (U) CLOCK (+)

1. SIGNAL TITLE:	CLOCK (+)
2. SIGNAL TYPE:	Digital gated square wave
3. SIGNAL FROM:	Integrated Communications Control Panel (ICCP) J3-7 HI, J3-9 SHIELD (RT #1) ICCP J3-13 (RT #2)
4. FUNCTION:	Provide serial CLOCK (+) timing to the RT-1145/ARC-164(V) for serial data synchronization.
5. NUMBER OF WIRES:	1
6. RT-1145/ARC-164(V) CONNECTOR/PIN: ASSIGNMENT	J1-U
7. SIGNAL CHARACTERISTICS:	
a. SOURCE IMPEDANCE:	Fairchild 9614 line driver or equivalent
b. LOAD IMPEDANCE:	~~200~~ 270 Ω from CLOCK (+) to GND
c. LOAD CURRENT:	Imax = 40 mA
d. CLOCK FREQUENCY:	620 Hz ± 20%
e. SHIELDING REQUIREMENTS:	Twisted shielded pair with respect to CLOCK (-)
f. RISE TIME:	≤ 400 microseconds
g. FALL TIME:	≤ 400 microseconds
h. CLOCK PHASING:	CLOCK (+) shall be 180° out of phase with respect to CLOCK (-). Data transfer shall be coincident with the negative going portion of CLOCK (+).
i. LOGIC ONE (HI) LEVEL:	≥ 2.4 VDC
j. LOGIC ZERO (LO) LEVEL:	≤ 0.8 VDC
k. SPECIAL REQUIREMENTS:	The CLOCK (+) input shall consist of 32 clock periods followed by a blank period equal to 8 clock periods where CLOCK (+) is HI. Figure 2 shows typical CLOCK (+) input.

3.2.2.1.4 (U) CLOCK (-)

1.	SIGNAL TITLE:	CLOCK (-)
2.	SIGNAL TYPE:	Digital gated square wave
3.	SIGNAL FROM:	Integrated Communications Control Panel (ICCP) J3-8 (RT #1) ICCP J3-14 (RT #2)
4.	FUNCTION:	Provide serial CLOCK (-) timing to the RT-1145/ARC-164(V) for serial data synchronization.
5.	NUMBER OF WIRES:	1
6.	RT-1145/ARC-164(V) CONNECTOR/PIN: ASSIGNMENT	J1-V
7.	SIGNAL CHARACTERISTICS:	
a.	SOURCE IMPEDANCE:	Fairchild 9614 line driver or equivalent
b.	LOAD IMPEDANCE:	270 ~~200~~ Ω from CLOCK (-) to +5 VDC
c.	LOAD CURRENT:	Imax = 40 mA
d.	CLOCK FREQUENCY:	620 Hz ± 20%
e.	SHIELDING REQUIREMENTS:	Twisted, shielded pair with respect to CLOCK (+)
f.	RISE TIME:	≤ 400 microseconds
g.	FALL TIME:	≤ 400 microseconds
h.	CLOCK PHASING:	CLOCK (-) shall be 180° out of phase with respect to CLOCK (+)
i.	LOGIC ONE (HI) LEVEL:	≥ 2.4 VDC
j.	LOGIC ZERO (LO) LEVEL:	≤ 0.8 VDC
k.	SPECIAL CONDITIONS	The CLOCK (-) input shall consist of 32 clock periods followed by a blank period equal to 8 clock periods where CLOCK (-) is LO. Figure 2 shows typical CLOCK (-) input.

3.2.2.1.5 (U) DATA (+)

1. SIGNAL TITLE:	DATA (+)
2. SIGNAL TYPE:	Serial digital bi-phase (HI/LO)
3. SIGNAL FROM:	Integrated Communications Control Panel (ICCP) J3-4 (RT #1) J3-6 SHIELD ICCP J3-10 (RT #2)
4. FUNCTION:	Provide serial frequency selection, bandwidth and mode information to the RT-1145/ARC-164(V) from the ICCP.
5. NUMBER OF WIRES:	1
6. RT-1145/ARC-164(V) CONNECTOR/PIN: ASSIGNMENT	J1-W
7. SIGNAL CHARACTERISTICS:	
a. SOURCE IMPEDANCE:	Fairchild 9614 line driver or equivalent 270
b. LOAD IMPEDANCE:	200Ω from DATA (+) to GND
c. LOAD CURRENT:	Imax = 40 mA
d. DATA BIT IDENTIFICATION:	All data bits use negative logic (LO on DATA (+) selects function) except bits 24 through 27 which are positive logic (HI on DATA (+) selects function). DATA (+) bit functions are as shown on Figure 3.
e. SHIELDING REQUIREMENTS:	Twisted, shielded pair with respect to DATA (-).
f. RISE TIME:	≤ 400 microseconds
g. FALL TIME:	≤ 400 microseconds
h. DATA PHASING:	DATA (+) shall be 180° out of phase with respect to DATA (-). Data transfer shall be coincident with the negative going portion of CLOCK (+).
i. LOGIC ONE (HI) LEVEL:	≥ 2.4 VDC

3.2.2.1.5 (U) DATA (+)

1. SIGNAL TITLE:	DATA (+)
2. SIGNAL TYPE:	Serial digital bi-phase (HI/LO)
3. SIGNAL FROM:	Integrated Communications Control Panel (ICCP) J3-4 (RT #1) J3-6 SHIELD ICCP J3-10 (RT #2)
4. FUNCTION:	Provide serial frequency selection, bandwidth and mode information to the RT-1145/ARC-164(V) from the ICCP.
5. NUMBER OF WIRES:	1
6. RT-1145/ARC-164(V) CONNECTOR/PIN: ASSIGNMENT	J1-W
7. SIGNAL CHARACTERISTICS:	
a. SOURCE IMPEDANCE:	Fairchild 9614 line driver or equivalent
b. LOAD IMPEDANCE:	~~200Ω~~ 270 from DATA (+) to GND
c. LOAD CURRENT:	Imax = 40 mA
d. DATA BIT IDENTIFICATION:	All data bits use negative logic (LO on DATA (+) selects function) except bits 24 through 27 which are positive logic (HI on DATA (+) selects function). DATA (+) bit functions are as shown on Figure 3.
e. SHIELDING REQUIREMENTS:	Twisted, shielded pair with respect to DATA (-).
f. RISE TIME:	≤ 400 microseconds
g. FALL TIME:	≤ 400 microseconds
h. DATA PHASING:	DATA (+) shall be 180° out of phase with respect to DATA (-). Data transfer shall be coincident with the negative going portion of CLOCK (+).
i. LOGIC ONE (HI) LEVEL:	≥ 2.4 VDC

3.2.2.1.5 (Continued)

j. LOGIC ZERO (LO) LEVEL: $\leq$ 0.8 VDC

k. SPECIAL CONDITIONS: One data word shall consist of 32 bits followed by a blank period equal to 8 clock periods where DATA (+) is LO. Figure 2 shows typical DATA (+) input.

3.2.2.1.6 (U) DATA (-)

1. SIGNAL TITLE:	DATA (-)
2. SIGNAL TYPE:	Serial digital bi-phase (HI/LO)
3. SIGNAL FROM:	Integrated Communications Control Panel (ICCP) J3-5 (RT #1) ICCP J3-11 (RT #2)
4. FUNCTION:	Provide serial frequency selection, bandwidth and mode information to the RT-1145/ARC-164(V) from the ICCP.
5. NUMBER OF WIRES:	1
6. RT-1145/ARC-164(V) CONNECTOR/PIN ASSIGNMENT:	J1-Y
7. SIGNAL CHARACTERISTICS:	
a. SOURCE IMPEDANCE:	Fairchild 9614 line driver or equivalent 270
b. LOAD IMPEDANCE:	200Ω from DATA (-) to +5 VDC
c. LOAD CURRENT:	Imax = 40 mA
d. DATA BIT IDENTIFICATION:	DATA (-) bit functions are as shown on Figure 3.
e. SHIELDING REQUIREMENTS:	Twisted, shielded pair with respect to DATA (+).
f. RISE TIME:	≤ 400 microseconds
g. FALL TIME:	≤ 400 microseconds
h. DATA PHASING	DATA (-) shall be 180° out of phase with respect to DATA (+). Data transfer shall be coincident with the negative going portion of CLOCK (+).
i. LOGIC ONE (HI) LEVEL:	≥ 2.4 VDC
j. LOGIC ZERO (LO) LEVEL:	≤ 0.8 VDC
k. SPECIAL CONDITIONS:	One data word shall consist of 32 bits followed by a blank period equal to 8 clock periods where DATA (-) is HI. Figure 2 shows typical DATA (-) input.

3.2.2.1.7 TONE KEY

1. SIGNAL TITLE: R1 UHF #1 TONE XMIT ENABLE
~~R2 UHF #2 TONE XMIT ENABLE~~

2. SIGNAL TYPE: Discrete Bi-Level (Open/Ground)

3. SIGNAL FROM: ~~AIU1 J1-98 (RT #1), ICSCP J7-91 (RT #1),~~
~~PACS J2-82 (RT #1), AIU2 J3-12 (RT #2),~~
~~ICSCP J7-92 (RT #2)~~ ICCP J3-87 (RT #1 ONLY)

4. SIGNAL TO: RT #1 ~~& 2~~ FWD & AFT ICCP J1- E

5. FUNCTION:

1) ~~The appropriate AIU provides Tone Key control during automatic download of MWOD data.~~ The ICCP ~~ICSCP~~ provides Tone Key control during manual download of MWOD data.

2) If not loading a MWOD, and a TOD has been loaded, actuating the ICCP ICSCP Radio Tone switch ~~or releasing a weapon,~~ sets J1-F and J1-H low, causing the TOD to be transmitted followed by a 1 kHz tone.

3) If not loading a MWOD, and TOD has not been loaded, actuating the ICCP ICSCP Radio Tone switch ~~or releasing a weapon,~~ sets J1-F and J1-H low causing only a 1 kHz tone to be transmitted.

6. NUMBER OF WIRES: 1

7. SIGNAL CHARACTERISTICS:

a. CODING:
TRUE: TRANSMIT (Ground) (Tone Key TRUE)
FALSE: RECEIVE (Open)

b. SOURCE IMPEDANCE:
TRUE: ~~AIU, ICSCP, PACS~~ ICCP Ground
FALSE: ~~AIU~~ ≥ 50K Ohms: Open ~~FET Drain~~ switch (ICCP)
~~ICSCP, PACS:~~ Open Collector

c. LOAD CURRENT:
TRUE: I_{max} = 8mA from RT-1504/ARC-164
FALSE: Open Circuit

d. VOLTAGE:
TRUE: ≤ 1.0 VDC @ 8 mA. If J1-H is also low, the RT-1504/ARC-164 will transmit a 1 kHz tone and TOD.
FALSE: ≥ 50k ohms (+12 VDC on R/T line) causes RT to operate in receiver mode. Voltage transients shall be ≤ 60 VDC. Maximum open circuit voltage from R/T shall be +12 VDC (diode isolated).

e. SHIELDING REQUIREMENTS: None

f. INTERFACE CIRCUIT: Representative interface circuits for this signal are shown on pages 13 and 14.

3.2.2.1.7 (U) X-MODE ENABLE

1. SIGNAL TITLE:	X-MODE ENABLE
2. SIGNAL TYPE:	Discrete Bi-Level (Open/Ground)
3. SIGNAL FROM:	Integrated Communications Control Panel ~~(ICCP)~~ ~~Z-AHF J2-R (RT #1)~~ Antenna Switch J5-12 (RT #1) ~~Z-AHP J2-U (RT #2)~~
4. FUNCTION:	Provides bandwidth control for the main receiver assembly of the RT-1145/ARC-164(V). Deselects ADF operation by forcing RT #1 to the lower antenna.
5. NUMBER OF WIRES:	1
6. RT-1145/ARC-164(V) CONNECTOR/PIN: ASSIGNMENT	J1-G
a. SOURCE IMPEDANCE:	See i. and j. below
b. LOAD IMPEDANCE:	N/A
c. LOAD CURRENT:	I_{max} = 5 mA from RT-1145/ARC-164(V)
d. VOLTAGE RANGE:	Maximum open circuit voltage from the R/T shall not exceed +14 ± 2 VDC (diode isolated)
e. FREQUENCY RANGE:	DC
f. SHIELDING REQUIREMENTS:	None
g. RISE TIME:	N/A
h. FALL TIME:	N/A
i. X-MODE ENABLE:	GROUND: ≤ 2.0 VDC @ 4 mA allows the main receiver to operate in wide-band IF mode.
j. X-MODE DISABLE:	OPEN: ≥ 50K Ω (+14 ± 2 VDC from R/T) allows main receiver to operate in narrow band IF mode.
k. SPECIAL REQUIREMENTS:	Open circuit voltage from RT-1145/ARC-164(V) diode isolated in R/T. Antenna Switch has 16Vdc pull-ups on this pin via U1 and U3 integrated circuits.

3.2.2.1.8 (U) X-MIT KEY

1. SIGNAL TITLE:	X-MIT KEY
2. SIGNAL TYPE:	Discrete Bi-Level (Open/Ground)
3. SIGNAL FROM:	Throttle-grip (Aircraft key line) diode isolated
4. FUNCTION:	Antenna Switch J5-8 (RT #1, SINGLE SEAT) Grounding the X-MIT KEY line causes the RT-1145/ARC-164(V) to operate in the transmit mode. An open circuit on the X-MIT KEY line shall cause the RT-1145/ARC-164(V) to operate in the receive mode of operation. ADF Control Amp SEE ATTACHED
5. NUMBER OF WIRES:	1
6. RT-1145/ARC-164(V) CONNECTOR/PIN: ASSIGNMENT	J1-H
7. SIGNAL CHARACTERISTICS:	
a. SOURCE IMPEDANCE:	See i. and j.
b. LOAD IMPEDANCE:	N/A
c. LOAD CURRENT:	I_{max} = 8 mA from RT-1145/ARC-164(V)
d. VOLTAGE RANGE:	Maximum open circuit voltage from R/T shall be +12 VDC (diode isolated)
e. FREQUENCY RANGE:	DC
f. SHIELDING REQUIREMENTS:	None
g. RISE TIME:	N/A
h. FALL TIME:	N/A
i. TRANSMIT:	GROUND: $\leq$ 1.5 VDC @ 8 mA causes RT-1145/ARC-164(V) to operate in the transmit mode.

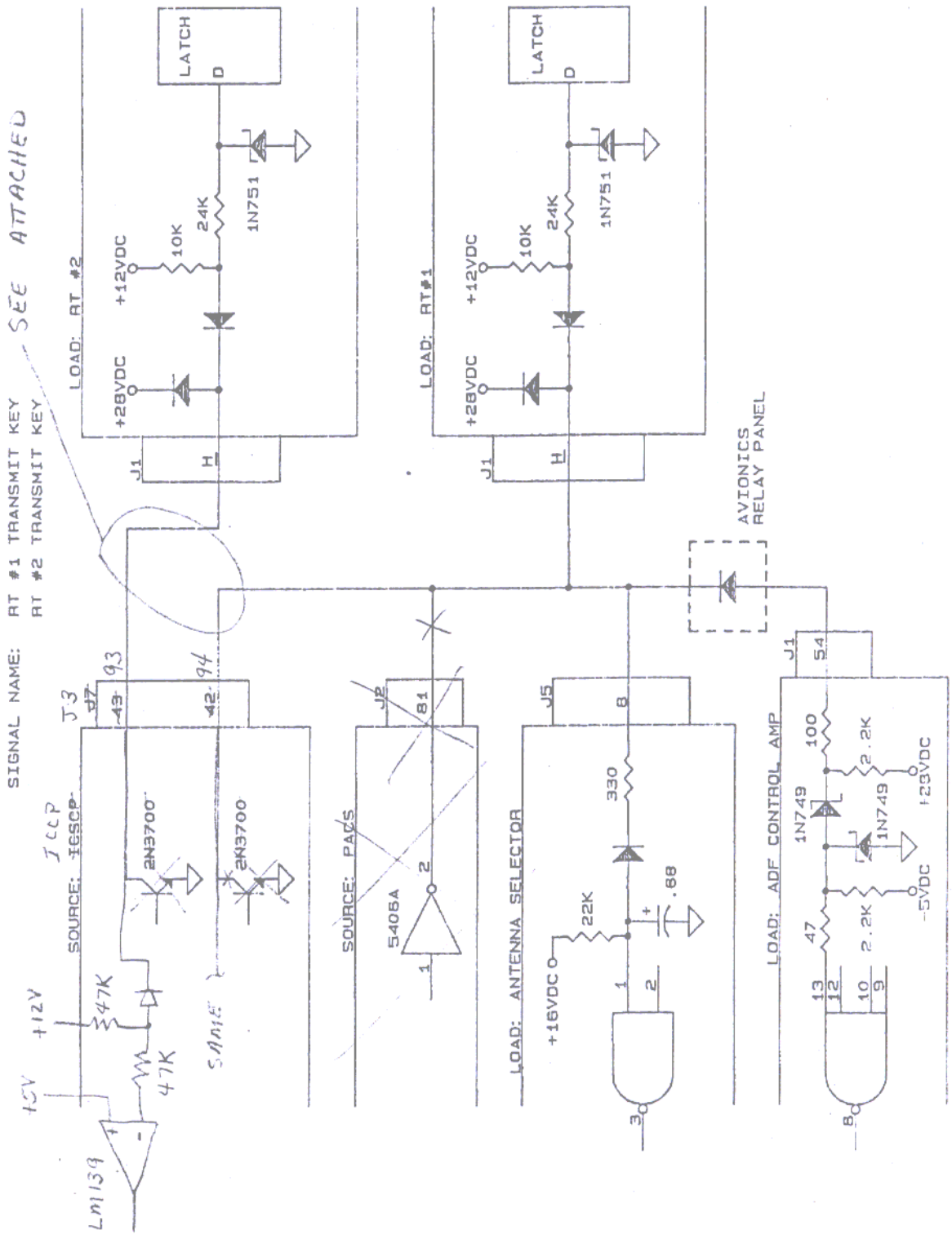
SIGNAL NAME: RT #1 TRANSMIT KEY
RT #2 TRANSMIT KEY
SEE ATTACHED
LOAD: RT #2
LOAD: RT#1
LATCH
D
+28VDC
+12VDC
10K
24K
1N751
J1
H
AVIONICS
RELAY PANEL
J3
J7
93
94
43
42
SOURCE: ICCP
2N3700
+12V
47K
+5V
LM139
SAME
J2
81
SOURCE: PACS
5406A
J5
8
LOAD: ANTENNA SELECTOR
+16VDC
22K
330
.68
LOAD: ADF CONTROL AMP
54
100
2.2K
1N749
+28VDC
-5VDC
47
13
12
10
9

XMIT KEY

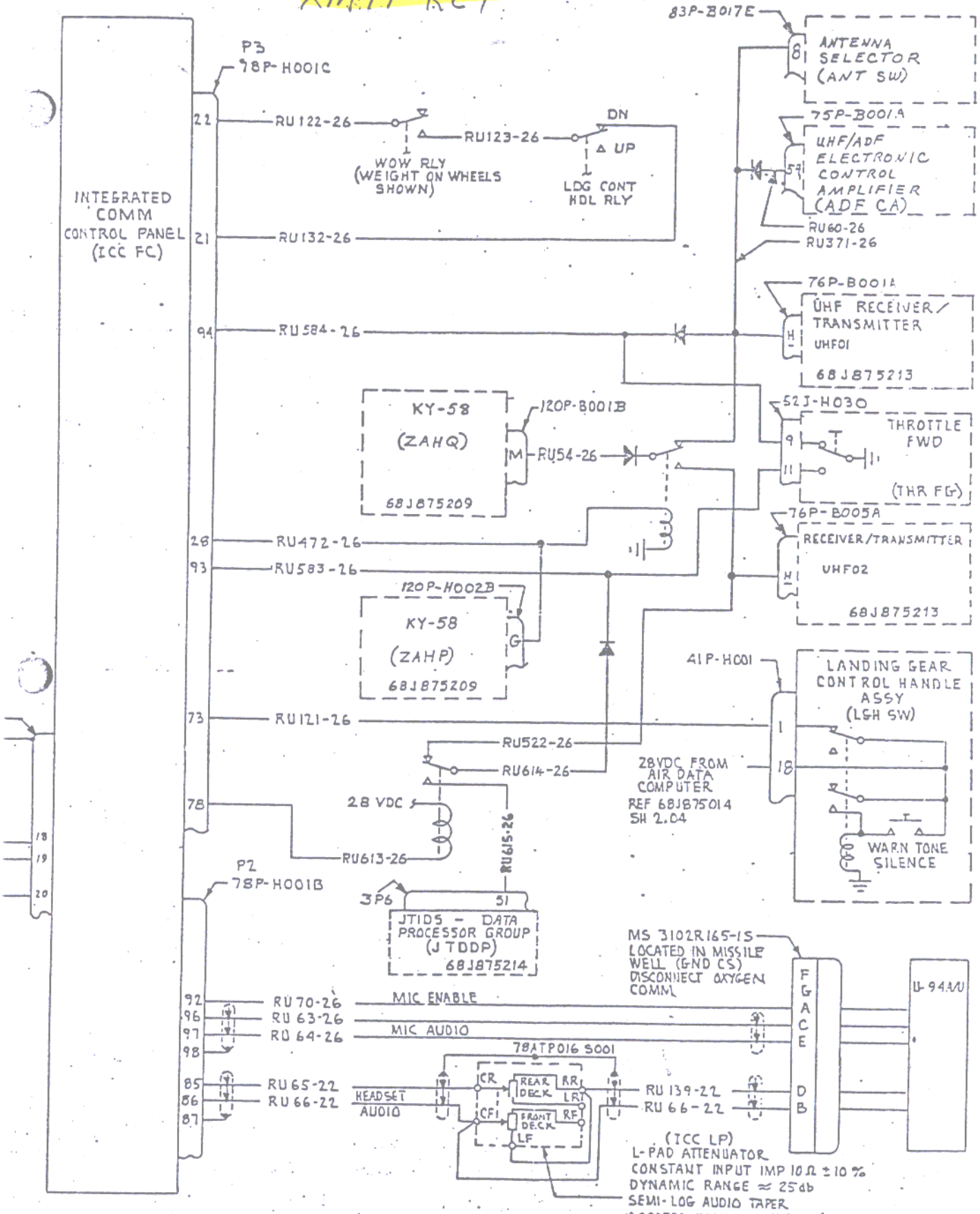

F-15 C ONLY

SIZE	CODE IDENT NO.	DWG NO. 68J875201
	76301	WIRING DIAGRAM BASIC SCHEMATIC INTEGRATED COMM/NAV/IDENT PNL
SCALE	REV 02-28-86	SHEET 3

XMIT KEY

F-15 D

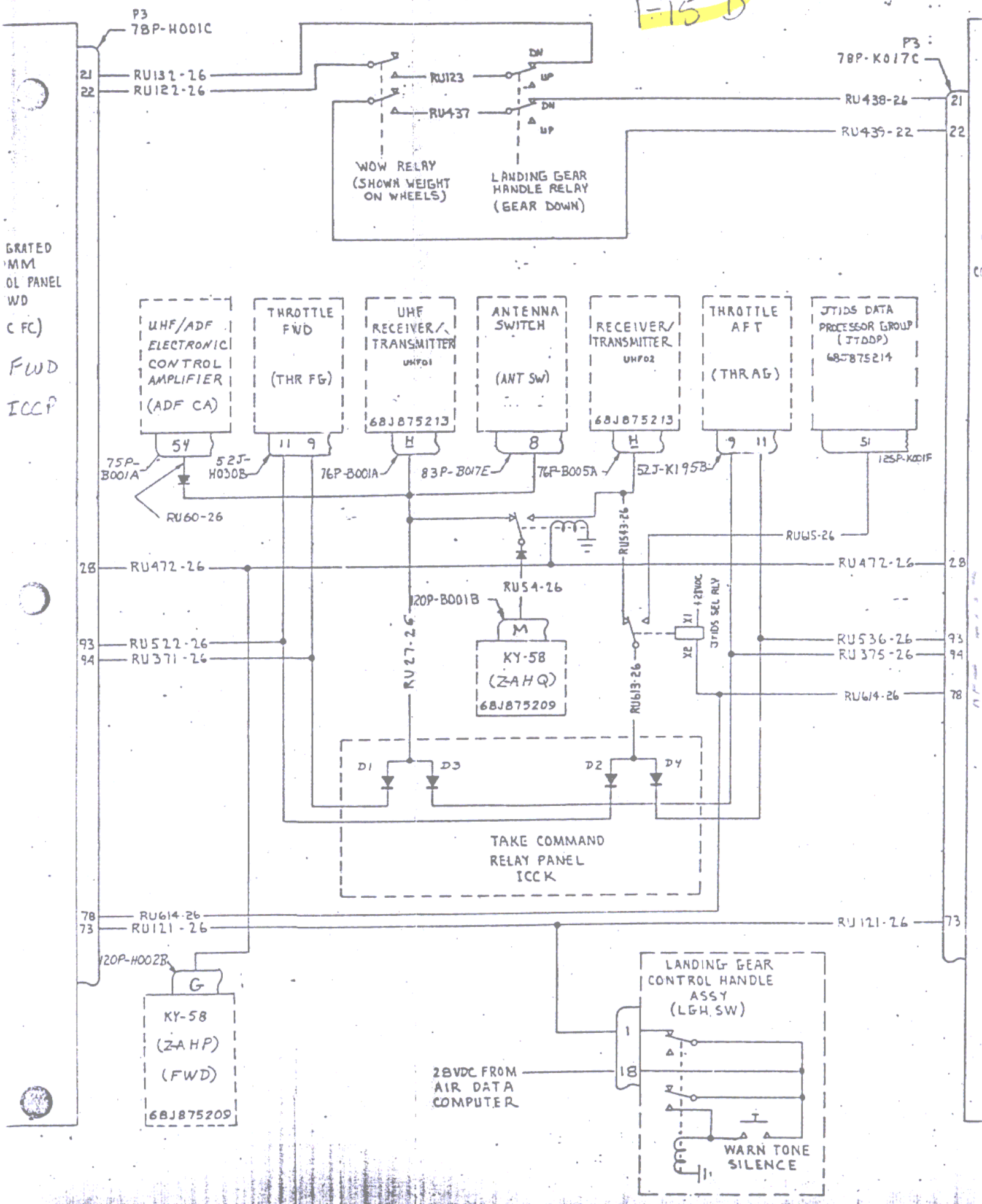

3.2.2.1.9 (U) PWR ON/OFF

1. SIGNAL TITLE:	PWR ON/OFF
2. SIGNAL TYPE:	Discrete Bi-Level (Open/Ground)
3. SIGNAL FROM:	~~Integrated Communications, Navigation and Identification Control Panels (ICNICP)~~ RT #1 MCCP VIA HUD RT #2 ICCP J3-89
4. FUNCTION:	Controls application of electrical power to the RT-1145/ARC-164(V) Receiver Transmitter.
5. NUMBER OF WIRES:	1
6. RT-1145/ARC-164(V) CONNECTOR/PIN: ASSIGNMENT	J1-H
7. SIGNAL CHARACTERISTICS:	
a. SOURCE IMPEDANCE:	See i. and j. below
b. LOAD IMPEDANCE:	N/A
c. LOAD CURRENT:	I_{max} = 10 mA from RT-1145/ARC-164(V)
d. VOLTAGE RANGE:	Maximum open circuit voltage from R/T shall be +28 VDC.
e. FREQUENCY RANGE:	DC
f. SHIELDING REQUIREMENTS:	None
g. RISE TIME:	N/A
h. FALL TIME:	
i. POWER ON:	GROUND: VIA SWITCH $\leq$ 1.5 VDC @ 5 mA applies +28 VDC power to the RT-1145/ARC-164(V).
j. POWER OFF:	OPEN: $\geq$ 50K Ω (+28 VDC from R/T) turns the RT-1145/ARC-164(V) off.
k. SPECIAL REQUIREMENTS:	Open circuit voltage from RT-1145/ARC-164(V) with Power OFF is diode isolated in R/T.

3.2.2.1.10 (U) GUARD ON/OFF

1. SIGNAL TITLE:	GUARD ON/OFF
2. SIGNAL TYPE:	Discrete Bi-Level (Open/Ground)
3. SIGNAL FROM:	Integrated Communications Control Panel (ICCP) J2-88 RT #1
4. FUNCTION:	Grounding the GUARD ON/OFF line turns on the auxiliary guard receiver in the RT-1145/ARC-164(V).
5. NUMBER OF WIRES:	1
6. RT-1145/ARC-164(V) CONNECTOR/PIN: ASSIGNMENT	J1-Z
7. SIGNAL CHARACTERISTICS:	
a. SOURCE IMPEDANCE:	See i. and j. below
b. LOAD IMPEDANCE:	N/A
c. LOAD CURRENT:	I_{max} = 10 mA from RT-1145/ARC-164(V)
d. VOLTAGE RANGE:	Maximum open circuit voltage from R/T shall be +12 VDC (diode isolated).
e. FREQUENCY RANGE:	DC
f. SHIELDING REQUIREMENTS:	None
g. RISE TIME:	N/A
h. FALL TIME:	N/A
i. GUARD ON:	GROUND: $\leq$ 2.0 VDC @ 3 mA turns the auxiliary guard receiver on.
j. GUARD OFF:	OPEN: $\geq$ 50K Ω (+12 VDC from R/T) turns the auxiliary guard receiver off.
k. SPECIAL CONDITIONS:	Open circuit voltage from RT-1145/ARC-164(V) with GUARD OFF is diode isolated in R/T.

3.2.2.1.11 (U) PRIMARY PWR IN

1.	SIGNAL TITLE:	PRIMARY PWR IN
2.	SIGNAL TYPE:	+28 VDC
3.	SIGNAL FROM:	F/TF-15 Air Vehicle Essential/Main Buss Circuit Breaker, via 5 Amp Power Line Filter.
4.	FUNCTION:	Provides DC power to operate the RT-1145/ARC-164(V) Receiver Transmitter.
5.	NUMBER OF WIRES:	1
6.	RT-1145/ARC-164(V) CONNECTOR/PIN: ASSIGNMENT	J1-D
7.	SIGNAL CHARACTERISTICS:	
	a. VOLTAGE RANGE:	20-30 VDC
	b. LOAD CURRENT:	5.35 A max

NOTE: 28 VDC power shall meet the requirements of MIL-STD-704A for Category B equipment.

3.2.2.1.13 (U) SIGNAL GROUND

1. SIGNAL TITLE:	SIGNAL GND
2. SIGNAL TYPE:	Wideband Audio return Unbalanced
3. SIGNAL FROM:	Integrated Communication Control Panel (ICCP) and F/TF-15 Chassis Ground.
4. FUNCTION:	Provide wideband audio return (i.e. see Para. 3.2.2.2.3) from ICCP to the RT-1145/ARC-164(V).
5. NUMBER OF WIRES:	1
6. RT-1145/ARC-164(V) CONNECTOR/PIN: ASSIGNMENT	J1-A
a. INPUT IMPEDANCE:	$\leq 0.1\ \Omega$
b. SHIELDING REQUIREMENTS:	Twisted shielded pair with X-MODE RCV AUDO (See Para. 3.2.2.2.3). Tied to PRIMARY PWR RTN (See Para. 3.2.2.1.12) and F/TF-15 chassis ground external to RT-1145/ ARC-164(V).

3.2.2.1.14 (U) X-MODE XMIT AUDIO

1.	SIGNAL TITLE:	X-MODE XMIT AUDIO
2.	SIGNAL TYPE:	Audio Input
3.	SIGNAL FROM:	~~TSEC/KY-28~~ Z-AHQ J2-B
4.	FUNCTION:	Provide wideband modulation to the RT-1145/ARC-164(V) from the KY-2858 secure speech equipment.
5.	NUMBER OF WIRES:	1
6.	RT-1145/ARC-164(V) CONNECTOR/PIN: ASSIGNMENT	J1-J
7.	SIGNAL CHARACTERISTICS:	
a.	SOURCE IMPEDANCE:	~~600Ω resistive~~ 780Ω Unfiltered 1680Ω Filtered
b.	LOAD IMPEDANCE:	600Ω ± 20% resistive, See item k.
c.	LOAD CURRENT:	Imax = 10 mA
d.	INPUT VOLTAGE RANGE:	~~12 ± 1~~ 1-12 Vp-p (~~i.e. 3.89 - 4.60 Vrms~~) $V_{IN} = 12[R_L/(R_L + \text{SOURCE IMPEDANCE})]$ see k.
e.	MODULATION RANGE:	0-100%
f.	MODULATION CHARACTERISTICS:	~~1-10~~ 3.3 Vp-p shall provide at least m = +80% @ 1000 Hz. An input 6dB above that required for m = +80% @ 1000 Hz shall result in m ≤ -100%.
g.	FREQUENCY RANGE:	70 - 25,000 Hz @ 18,750 Bit/sec rate.
h.	SHIELDING REQUIREMENTS:	Shielded single conductor.
i.	RISE TIME:	N/A
j.	FALL TIME:	N/A
k.	SPECIAL REQUIFEMENTS:	~~None~~ In the aircraft, the WB modulation signals from each radio are tied together, resulting in a load of 300 ohms to the Z-AHQ.

3.2.2.2.1 (U) RCV AUDIO (HI)

1. SIGNAL TITLE:	RCV AUDIO (HI) (Narrowband audio)
2. SIGNAL TYPE:	AUDIO Input unbalanced
3. SIGNAL TO:	Integrated Communication Control Panel (ICCP) FWD ICCP J2-45 AFT ICCP J2-45
4. FUNCTION:	Provide 150 Ω ~~or 600 Ω~~ (300-3500 Hz) narrowband audio output from the RT-1145/ARC-164(V)
5. NUMBER OF WIRES:	1
6. RT-1154/ARC-164(V) CONNECTOR/PIN ASSIGNMENT	J1-X
7. SIGNAL CHARACTERISTICS	
a. SOURCE IMPEDANCE (ARC-164):	150 Ω ~~/600 Ω~~ (300-3500 Hz) Resistive
b. LOAD IMPEDANCE:	150 Ω ~~/300 Ω~~ (300-3000 Hz) isolation transformer in ICCPs. See item j.
c. LOAD CURRENT:	I_{max} = 50 mA
d. VOLTAGE RANGE:	5.47 to 7.34 Vrms across 150 Ω ~~(i.e. audio power between .200 and .360 watts)~~ with 1000 μ volt rf Input (open circuit) M=90% @ 1000 Hz.
e. FREQUENCY RANGE:	300-3500 Hz
f. SHIELDING REQUIREMENTS:	Twisted, shielded pair with RCV AUDIO (LO). Signal isolated at R/T.
g. RISE TIME:	N/A
h. FALL TIME:	N/A
i. AUDIO RESPONSE:	Narrowband audio output shall be as in d. above. The audio response between 300 to 3500 Hz shall be within +1dB, -3dB with respect to the reference level at 1000 Hz. Above 3500 Hz, the audio output roll-off shall be 6dB per octave or greater.
j. SPECIAL REQUIREMENTS:	The audio output shall be ungrounded. Shield tied to chassis ground at R/T. Two ICCPs tied together, 300 ohms each, resulting in a 150 ohm load to the radio.

Transmit sidetone shall be 4.6 Vrms for a black mod audio Input (J1-K) of 1.4 Vrms at 1 KHz

3.2.2.2.2 (U) Narrowband Audio (LO)

1. SIGNAL TITLE:	RCV AUDIO (LO)
2. SIGNAL TYPE:	AUDIO Return Unbalanced
3. SIGNAL TO:	Integrated Communications Control Panel (ICCP) J2-47
4. FUNCTION:	Provide 150 Ω ~~or 600 Ω~~ (300-3500 Hz) narrowband audio return from ICCP
5. NUMBER OF WIRES:	1
6. RT-1145/ARC-164(V) CONNECTOR/PIN ASSIGNMENT:	J1-E
7. SIGNAL CHARACTERISTICS:	
a. SOURCE IMPEDANCE:	N/A
b. LOAD IMPEDANCE:	N/A
c. LOAD CURRENT:	N/A
d. VOLTAGE RANGE:	N/A
e. FREQUENCY RANGE:	300-3500 Hz
f. SHIELDING REQUIREMENTS:	Twisted Shielded pair with RCV AUDIO (HI). Signal isolated at R/T
g. RISE TIME:	N/A
h. FALL TIME:	N/A
i. AUDIO CHARACTERISTICS:	See 3.2.2.2.1
j. SPECIAL REQUIREMENTS:	Shield tied to chassis ground at R/T

3.2.2.2.3 (U) X-MODE (WIDEBAND) RCV AUDIO (HI)

1. SIGNAL TITLE:	X-MODE RCV AUDIO (HI)
2. SIGNAL TYPE:	AUDIO Unbalanced
3. SIGNAL TO:	Integrated Communication Control Panel (ICCP) J2-42 FWD ICCP J2-42 AFT } RT#1
4. FUNCTION:	Provide 500 Ω (70-25,000 Hz) audio output from the RT-1145/ARC-164(V) RT#2 FWD ICCP J2-6 AFT ICCP J2-6
5. NUMBER OF WIRES:	1
6. RT-1145/ARC-164 CONNECTOR/PIN: ASSIGNMENT	J1-C
7. SIGNAL CHARACTERISTICS:	
a. SOURCE IMPEDANCE (ARC-164):	500 Ω Resistive
b. LOAD IMPEDANCE	10 K Ω in each ICCP. Parallel load of 5 Kohms
c. LOAD CURRENT:	
d. VOLTAGE RANGE:	≥ 2.75 Vrms across ~~10~~ 5 K Ω with an rf input of 1000 μvolts (open circuit) m=90% @ 1000 Hz
e. FREQUENCY RANGE:	70-25,000 Hz
f. SHIELDING REQUIREMENTS:	Single ~~Twisted shielded pair with return line. Return and shield tied to~~ wire ground at chassis.
g. RISE TIME:	N/A
h. FALL TIME:	N/A
i. AUDIO RESPONSE:	The wideband audio output shall be ± 3 dB between 70 Hz and 20 kHz and +3 dB, -5 dB between 20 kHz and 25 kHz with respect to the reference at 1000 Hz. The audio output from the R/T shall be ahead of the squelch circuit.

3.2.2.2.4 (U) MAIN SQUELCH OUT

1.	SIGNAL TITLE:	MAIN SQUELCH OUT
2.	SIGNAL TYPE:	Discrete Bi-Level (Open/Ground)
3.	SIGNAL TO:	3-port Antenna Selector JS-11
4.	FUNCTION:	Provide an indication to the 3-port Antenna Selector that main receiver squelch of the RT-1145/ARC-164(V) has been activated.
5.	NUMBER OF WIRES:	1
6.	RT-1145/ARC-164(V) CONNECTOR/PIN: ASSIGNMENT	J1-A
7.	SIGNAL CHARACTERISTICS:	
a.	SOURCE IMPEDANCE:	UNSQUELCHED (i.e. AUDIO OUT): $\leq$ 0.5 VDC @ 50 mA SQUELCHED (i.e. NO AUDIO OUT): $\geq$ 50 K Ω
b.	LOAD IMPEDANCE:	~~600 Ω~~ +16Vdc thru 10Kohms
c.	LOAD CURRENT:	I_{max}=50 mA (max. current sink of R/T)
d.	VOLTAGE RANGE:	0-30 VDC (RT is open Collector)
e.	FREQUENCY RANGE:	DC
f.	SHIELDING REQUIREMENTS:	NONE
g.	ATTACK TIME:	$\leq$ 50 milliseconds
h.	RELEASE TIME:	$\leq$ 150 milliseconds
i.	R/T UNSQUELCHED (i.e. AUDIO OUT):	GROUND: RT-1145/ARC-164(V) shall provide a ground capable of handling at least 50 mA @ $\leq$ 0.5 VDC.
j.	R/T SQUELCHED (i.e. NO AUDIO OUT):	OPEN: $\geq$ 50 K Ω
k.	SPECIAL REQUIREMENTS:	Voltage transients per MIL-STD-704A

3.2.2.2.5 (U) SWITCHED 28 VDC OUT

1. SIGNAL TITLE:	Switched +28 VDC output
2. SIGNAL TYPE:	+27.5 VDC
3. SIGNAL TO:	antenna selector J5-3 (RT #1)
4. FUNCTION:	Provides switched +27.5 VDC output to the antenna selector after RT-1145/ARC-164(V) primary power is turned on.
5. NUMBER OF WIRES:	1
6. RT-1145/ARC-164(V) CONNECTOR/PIN ASSIGNMENT:	J1-N
7. SIGNAL CHARACTERISTICS:	
a. SOURCE IMPEDANCE:	N/A
b. LOAD IMPEDANCE:	+27.5 VDC @ 1A
c. LOAD CURRENT:	I_{max} = 1 Ampere
d. VOLTAGE RANGE:	0-27.5 VDC (Transients per MIL-STD-704A)
e. FREQUENCY RANGE:	DC
f. SHIELDING REQUIREMENTS:	NONE
g. RISE TIME:	≤ 5 milliseconds
h. FALL TIME:	≤ 1 milliseconds
i. SWITCHED +27.5 DC OUT:	Grounding the POWER ON/OFF line (see Para. 3.2.2.1.9) shall provide +27.5 VDC output within 5 msec after the ground is applied.
j. NO SWITCHED +27.5 VDC OUT:	Ungrounding the POWER ON/OFF line (see Para. 3.2.2.1.9) shall drop +27.5 VDC to 0 VDC within 1 msec after the ground is removed.
k. SPECIAL REQUIREMENTS:	Voltage Transients shall be per MIL-STD-704A

3.2.2.2.6 (U) GUARD AUDIO

1. SIGNAL TITLE: GUARD AUDIO

2. SIGNAL TYPE: AUDIO

3. SIGNAL TO: ~~TSEC/KY-28~~ Z-AHQ J2-F

4. FUNCTION: Provides amplitude moldulated wide-band (18,750 bit/sec) audio output to the TSEC/KY-28 secure speech equipment.

5. NUMBER OF WIRES: 1

6. RT-1145/ARC-164(V) CONNECTOR/PIN ASSIGNMENT: J1-B

7. SIGNAL CHARACTERISTICS:

a. SOURCE IMPEDANCE: 600 Ω ± 20% Resistive

b. LOAD IMPEDANCE: ~~600~~ 680 Ω Resistive

c. LOAD CURRENT:

d. VOLTAGE RANGE: ≥ 2.00 Vrms across 600 Ω with an rf input of 1000 μ volts (open circuit) M=90% @ 1000 Hz.

e. FREQUENCY RANGE: 70-25,000 Hz @ 18,750 bit/sec rate

f. SHIELDING REQUIREMENTS: Shielded single conductor.

g. RISE TIME: N/A

h. FALL TIME: N/A

i. AUDIO RESPONSE: Audio output between ~~70~~ 300 Hz and ~~20~~ 3.5 kHz shall be ± 3dB with respect to the reference at 1000 Hz. The audio output ~~between 20 kHz and 25 kHz shall be +3dB, -5dB with respect to the reference at 1000 Hz.~~ roll-off above 3500 Hz shall be 6dB per octave or greater.

+1, -3dB

j. SPECIAL REQUIREMENTS: NONE

3.2.2.3.1 (U) Upper/Lower antenna input/output

1. SIGNAL TITLE:	Upper/Lower Antenna Input/Output
2. SIGNAL TYPE:	Radio Frequency (RF)
3. SIGNAL TO/FROM:	Upper/Lower UHF/L-Band Antenna
4. FUNCTION:	Transmit UHF replies and receive UHF transmissions
5. NUMBER OF WIRES:	1
6. CONNECTOR:	J2
7. SIGNAL CHARACTERISTICS:	
a. IMPEDANCE:	52 ohms
b. FREQUENCY RANGE:	225.000 to 399.975 MHz
c. POWER OUTPUT (ARC-164)	≥ 10 watts AM
d. INPUT VOLTAGE (RANGE)	0-1.5 Vrms (open circuit)
e. VSWR	2.5:1.0 Max.
f. SPECIAL REQUIREMENTS:	Coaxial cable

RT #1 J2 TO Antenna Switch J1

RT #2 J2 TO Lower antenna J1

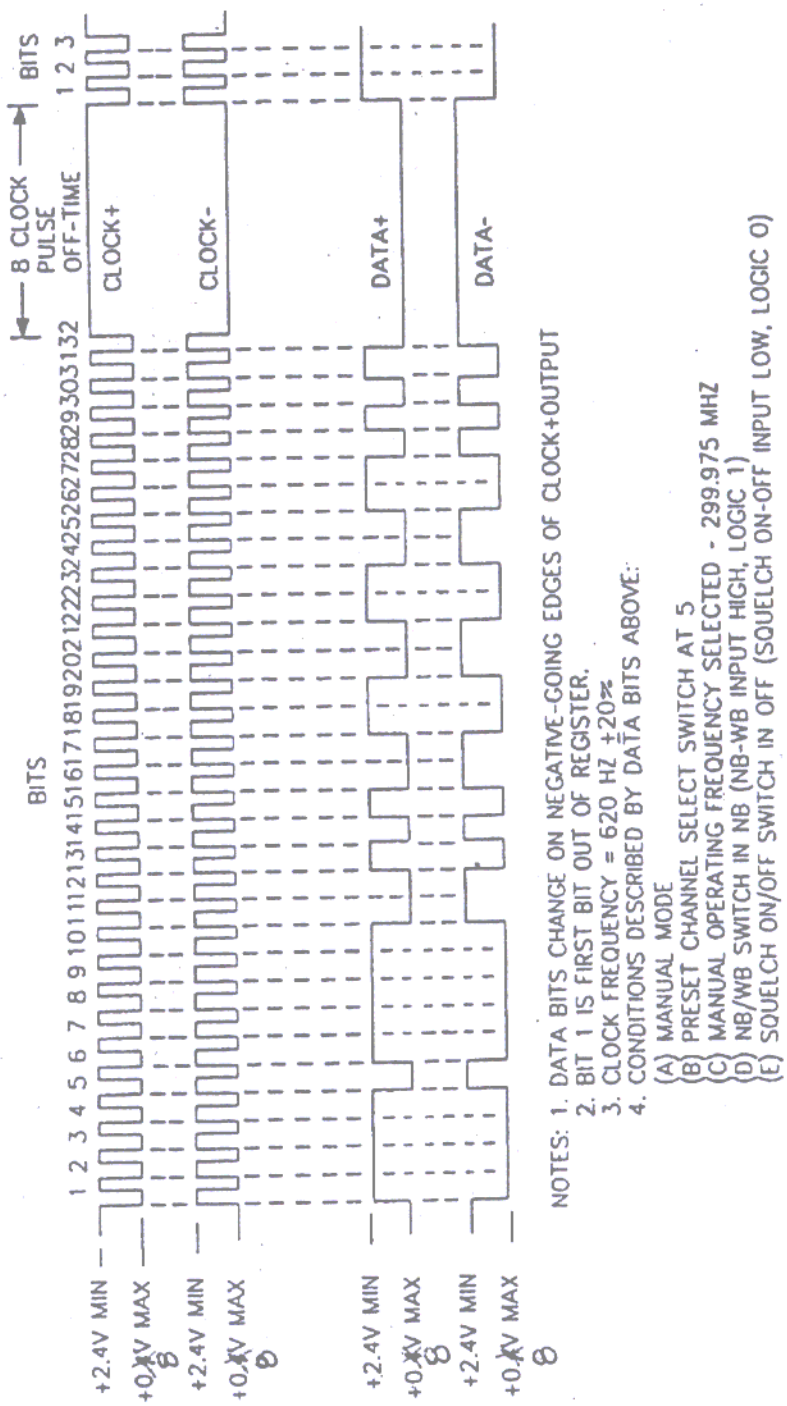

NOTES:
1. DATA BITS CHANGE ON NEGATIVE-GOING EDGES OF CLOCK+OUTPUT
2. BIT 1 IS FIRST BIT OUT OF REGISTER.
3. CLOCK FREQUENCY = 620 HZ ±20%
4. CONDITIONS DESCRIBED BY DATA BITS ABOVE:
   (A) MANUAL MODE
   (B) PRESET CHANNEL SELECT SWITCH AT 5
   (C) MANUAL OPERATING FREQUENCY SELECTED - 299.975 MHZ
   (D) NB/WB SWITCH IN NB (NB-WB INPUT HIGH, LOGIC 1)
   (E) SQUELCH ON/OFF SWITCH IN OFF (SQUELCH ON-OFF INPUT LOW, LOGIC 0)

Figure 3

Clock and Data Inputs

RT-1504/ARC-164

BIT NO.	LOGIC LVL	DATA(+)	DATA(-)	FUNCTION	DATA & OUTPUT DESCRIPTION
1	NEGATIVE	LO	HI	RT Channel 1	0 for Chan 1/11; 1 for all other
2	NEGATIVE	LO	HI	RT Channel 2	0 for Chan 2/12; 1 for all other
3	NEGATIVE	LO	HI	RT Channel 3	0 for Chan 3/13; 1 for all other
4	NEGATIVE	LO	HI	RT Channel 4	0 for Chan 4/14; 1 for all other
5	NEGATIVE	LO	HI	RT Channel 5	0 for Chan 5/15; 1 for all other
6	NEGATIVE	LO	HI	RT Channel 6	0 for Chan 6/16; 1 for all other
7	NEGATIVE	LO	HI	RT Channel 7	0 for Chan 7/17; 1 for all other
8	NEGATIVE	LO	HI	RT Channel 8	0 for Chan 8/18; 1 for all other
9	NEGATIVE	LO	HI	RT Channel 9	0 for Chan 9/19; 1 for all other
10	NEGATIVE	LO	HI	RT Channel 10	0 for Chan 10/~~0~~0; 1 for all other
11	NEGATIVE	LO	HI	RT Channel 11	0 for Chan 1-9 and 2~~0~~0; 1 Chan 10-19
12	NEGATIVE	LO	HI	Mode	0 for Manual and Have Quick; 1 for GUARD ~~Manual~~ and Channel (Note 7)
13	NEGATIVE	LO	HI	Mode	0 for Guard and Have Quick; 1 for Manual and Channel (Note 7)
14	POSITIVE	HI	LO	200/300MHz	0 for 200; 1 for 300
15	POSITIVE	HI	LO	10 MHz	
16	POSITIVE	HI	LO	20 MHz	Positive Logic BCD
17	POSITIVE	HI	LO	40 MHz	
18	POSITIVE	HI	LO	80 MHz	
19	POSITIVE	HI	LO	1 MHz	
20	POSITIVE	HI	LO	2 MHz	
21	POSITIVE	HI	LO	4 MHz	
22	POSITIVE	HI	LO	8 MHz	
23	POSITIVE	HI	LO	0.1 MHz	
24	POSITIVE	HI	LO	0.2 MHz	
25	POSITIVE	HI	LO	0.4 MHz	
26	POSITIVE	HI	LO	0.8 MHz	
27	POSITIVE	HI	LO	0.05 MHz	0 for .000 & .025;1 for .050 & .075
28	NEGATIVE	LO	HI	0.025 MHz	1 for .000/.050; 0 for .025 & .075
29	NEGATIVE	LO	HI	WB/NB	0 for WB; 1 for NB (Note 1)
				HQ-T/HQ-A	0 for HQ Mode T; 1 for HQ Mode AC or AM (Notes 2) 4,5,6
30	NEGATIVE	LO	HI	Squelch Disable	0 for disable; 1 for enable 1 for enable (Note 3)
31	POSITIVE	HI	LO	Spare	Fixed to 1
32	POSITIVE	HI	LO	Spare	0 fixed for all radios

NOTES: 1 ~~AIU shall control the WB/NB selection.~~
2 Valid for RT #1 when Bits 12 and 13 are both "0".
3 ~~AIU~~ shall keep this bit enabled.
ICCP

Figure 4

Data Bit Identification
RT-1504/ARC-164

4 HQ mode T Commands radio to receive HQ time.
5. HQ mode AC is antijam channel mode.
6. HQ mode AM is antijam manual mode.
7. ~~In the F-15E, when quade mode is selected, the AIU sends an undefined channel number.~~

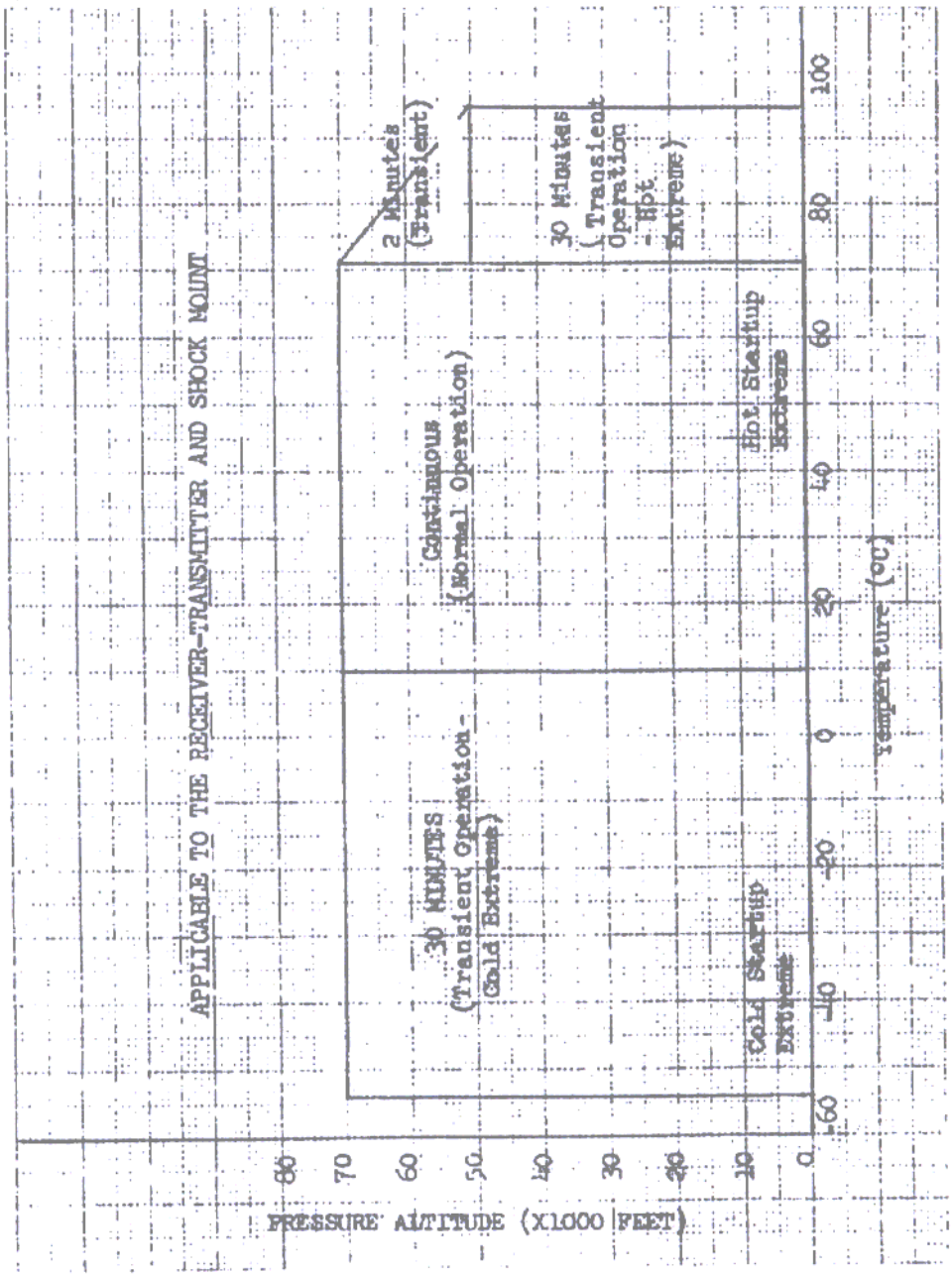

(U) Figure 4

Temperature Altitude Requirements